MasterSeries Sales Team
3 Castle Street
Carrickfergus
Co. Antrim BT38 7BE
Tel : 028 9036 5950

10002

Job Ref	: 1472
Sheet	: C / 662
Made by	: Tommy White
Date	: 04 August 2017 / Ver. 2017.08
Checked	:
Approved	:

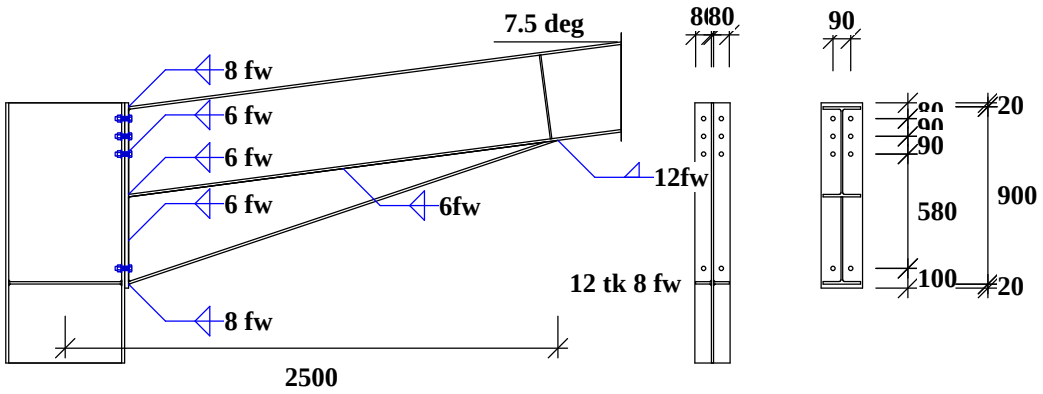

Plates S 275
Beam 457x191 UB 67 [S275]
Haunch 457x191 UB 67 [S275]

Column 610x178 UB 92 [S275]
Top 20 above top flange
Bot 400 below bottom flange

End-Plate 940 x 210 x 20 mm (31 kg)
8 No. M20 Grade 8.8 Bolts in 22 mm holes
Haunch Stiff 8 mm with 6 FW

1 Eaves Joint
Beam to Column Flange End-Plated Connection to EC 3 (UK NAD)
Loading Case 001
Basic Data

User Defined Applied Forces at Column/Right Rafter Interface

Right Rafter Forces M, Fvr, Fr	450.0 kNm, 300.0 kN, 100.0 kN
Resultant Forces M, Fv, F	450.0 kNm, 310.5 kN, 60.0 kN
Load directions	Top of Joint in Tension, Rafter moving Down and in Compression.
Design to	EC 3: Part 1-8: 2005 Design of Joints
	SCI Green Book
	P398: Joints in steel construction: Moment-Resisting Joints to Eurocode 3
Weld Grades	All weld grades provided to suit minimum connected steel grade

Basic Dimensions

Column-610x178UB92 [28]	D=603.0, B=178.8, T=15.0, t=10.9, r=12.7, py=275		
Rafter-457x191UB67 [28]	D=453.4, B=189.9, T=12.7, t=8.5, r=10.2, py=275		
Haunch-457x191UB67 [28]	D=453.4, B=189.9, T=12.7, t=8.5, r=10.2, py=275		
Bolts 20 mm Ø in 22 mm holes	Grade 8.8 Bolts		
Plates S 275	All weld grades provided to suit minimum connected steel grade		
Rafter Capacities Mc, Fvc, Fc	1046.2 kN.m, 1252.6 kN, 3395.2 kN	Mc = 1046.2 kN.m	OK

Summary of Results (Unity Ratios)

Moment Capacity 473.6 kNm (for 3 rows of bolts) (Modified Applied Mom. M_{mod}=410.1 kNm)		0.87	OK
Shear Capacity		0.90	OK
Flange Welds	0.68	0.68	OK
Web Welds	0.97, 0.29	0.97	OK
Haunch Welds	0.79, 0.07	0.79	OK
Column Compression stiff Web Weld	0.22	0.22	OK
End of Haunch Compression Zone	0.10, 0.07	0.10	OK

Step 1: Tension Zone

Basics

Bm/Plt b_p, W, t_{wb}, S_w, m_p, e_p, n_p	210.0, 90, 8.5, 6, 36.0, 60.0, 44.4	
Column B_c, t_{wc}, r_c, m_c, e_c, n_c	178.8, 10.9, 12.7, 29.4, 44.4, 36.7	
$F_{t,Rd}=k_2 \cdot f_{ub} \cdot A / \gamma_{m2}$	0.90•800•245/1.25	141.1 kN
$F_{T,3,Rd}=\sum F_{t,Rd}$	2•141.1	282.2 kN

BOLT ROW 1
Column Flange row 1 only

MasterSeries Sales Team
3 Castle Street
Carrickfergus
Co. Antrim BT38 7BE
Tel : 028 9036 5950

10002

Job Ref : **1472**
Sheet : **C / 663**
Made by : **Tommy White**
Date : **04 August 2017 / Ver. 2017.08**
Checked :
Approved :

m, e, e_x	29.4, 44.4, 80.0		
$l_{eff,cp}$=min(Circle, Indiv End)	min(184.7, 252.3)	184.7 mm	T2.2 (b)
$l_{eff,ncp}$=min(Corner2 (b), Side (e))	min(166.5, 173.1)	166.5 mm	T2.2 (b)
Mode 1 $l_{eff,1}$=min($l_{eff,cp}$, $l_{eff,cnp}$)	min(184.7, 166.5)	166.5 mm	
Mode 2 $l_{eff,2}$=$l_{eff,ncp}$	166.5	166.5 mm	
$M_{pl,1}$ =$l_{eff,1}$ •t_f^2•p_y/4/γ_{M0}	166.5•15.0•15.0•275.0/4/1.0	2576.0 kN.mm	
$M_{pl,2}$ =$l_{eff,2}$ •t_f^2•p_y/4/γ_{M0}	166.5•15.0•15.0•275.0/4/1.0	2576.0 kN.mm	
2•m•n-e_w•(m+n)	2•29.39•36.74-9.25•(29.39+36.74)	1547.8	
$F_{T,1,Rd}$=(8•n-2•e_w)•$M_{pl,1}$ /1547.8	(8•36.74-2•9.25)•2576.0/1547.8	458.4 kN	
$F_{T,2,Rd}$=(2•$M_{pl,2}$ +n•Nb•$F_{t,Rd}$)/(m+n)	(2•2576.0 + 36.74•2•141.1)/(29.39 + 36.74)	234.7 kN	
$F_{T,Rd}$ =min($F_{T,Rd}$ mode1,2,3)	min(458.4, 234.7, 282.2)	234.7 kN	

Column Web Tension row 1 only

ω=fn(l_{eff} t_w, A_{vc}, β)	fn(166.5, 10.9, 6929, 1.00)	0.96	
$F_{t,wc,Rd}$ =ω•$l_{eff,1}$ •t_{wc} •$f_{y,wc}$/γ_{M0}	0.96•166.5•10.9•275/1.00	478.3 kN	

End Plate row 1 only

m, e, mx, α	36.0, 60.0, 40.8, 6.6		
l_{eff} modes	$l_{eff,cp}$ = 225.9, $l_{eff,ncp}$ = 235.7		T2.2 (c)
Mode 1 $l_{eff,1}$=min($l_{eff,cp}$, $l_{eff,cnp}$)	min(225.9, 235.7)	225.9 mm	
Mode 2 $l_{eff,2}$=$l_{eff,ncp}$	235.7	235.7 mm	
$M_{pl,1}$ =$l_{eff,1}$ •t_f^2•p_y/4/γ_{M0}	225.9•20.0•20.0•265.0/4/1.0	5985.8 kN.mm	
$M_{pl,2}$ =$l_{eff,2}$ •t_f^2•p_y/4/γ_{M0}	235.7•20.0•20.0•265.0/4/1.0	6245.8 kN.mm	
2•m•n-e_w•(m+n)	2•35.95•44.40-8.25•(35.95+44.40)	2529.5	
$F_{T,1,Rd}$=(8•n-2•e_w)•$M_{pl,1}$ /2529.5	(8•44.40-2•8.25)•5985.8/2529.5	801.5 kN	
$F_{T,2,Rd}$=(2•$M_{pl,2}$ +n•Nb•$F_{t,Rd}$)/(m+n)	(2•6245.8 + 44.40•2•141.1)/(35.95 + 44.40)	311.4 kN	
$F_{T,Rd}$ =min($F_{T,Rd}$ mode1,2,3)	min(801.5, 311.4, 282.2)	282.2 kN	

Beam Web Tension row 1 only

$F_{t,wb,Rd}$ =$l_{eff,1}$ •t_{wb} •$f_{y,wb}$/γ_{M0}	225.9•8.5•275/1.00	528.0 kN	
Potential resistance of Bolt Row 1	$F_{t1,Rd}$	234.7 kN	Mode 2

BOLT ROW 2

Column Flange row 2 only

m, e	29.4, 44.4		
l_{eff} modes	$l_{eff,cp}$ = 184.7, $l_{eff,ncp}$ = 173.1		T2.2 (e)
Mode 1 $l_{eff,1}$=min($l_{eff,cp}$, $l_{eff,cnp}$)	min(184.7, 173.1)	173.1 mm	
Mode 2 $l_{eff,2}$=$l_{eff,ncp}$	173.1	173.1 mm	
$M_{pl,1}$ =$l_{eff,1}$ •t_f^2•p_y/4/γ_{M0}	173.1•15.0•15.0•275.0/4/1.0	2677.0 kN.mm	
$M_{pl,2}$ =$l_{eff,2}$ •t_f^2•p_y/4/γ_{M0}	173.1•15.0•15.0•275.0/4/1.0	2677.0 kN.mm	
2•m•n-e_w•(m+n)	2•29.39•36.74-9.25•(29.39+36.74)	1547.8	
$F_{T,1,Rd}$=(8•n-2•e_w)•$M_{pl,1}$ /1547.8	(8•36.74-2•9.25)•2677.0/1547.8	476.3 kN	
$F_{T,2,Rd}$=(2•$M_{pl,2}$ +n•Nb•$F_{t,Rd}$)/(m+n)	(2•2677.0 + 36.74•2•141.1)/(29.39 + 36.74)	237.8 kN	
$F_{T,Rd}$ =min($F_{T,Rd}$ mode1,2,3)	min(476.3, 237.8, 282.2)	237.8 kN	

Column Web Tension row 2 only

ω=fn(l_{eff} t_w, A_{vc}, β)	fn(173.1, 10.9, 6929, 1.00)	0.96	
$F_{t,wc,Rd}$ =ω•$l_{eff,1}$ •t_{wc} •$f_{y,wc}$/γ_{M0}	0.96•173.1•10.9•275/1.00	495.4 kN	

End Plate row 2 only

m, e	36.0, 60.0		
l_{eff} modes	$l_{eff,cp}$ = 225.9, $l_{eff,ncp}$ = 218.8		T2.2 (e)
Mode 1 $l_{eff,1}$=min($l_{eff,cp}$, $l_{eff,cnp}$)	min(225.9, 218.8)	218.8 mm	
Mode 2 $l_{eff,2}$=$l_{eff,ncp}$	218.8	218.8 mm	
$M_{pl,1}$ =$l_{eff,1}$ •t_f^2•p_y/4/γ_{M0}	218.8•20.0•20.0•265.0/4/1.0	5798.2 kN.mm	
$M_{pl,2}$ =$l_{eff,2}$ •t_f^2•p_y/4/γ_{M0}	218.8•20.0•20.0•265.0/4/1.0	5798.2 kN.mm	
2•m•n-e_w•(m+n)	2•35.95•44.40-8.25•(35.95+44.40)	2529.5	
$F_{T,1,Rd}$=(8•n-2•e_w)•$M_{pl,1}$ /2529.5	(8•44.40-2•8.25)•5798.2/2529.5	776.4 kN	
$F_{T,2,Rd}$=(2•$M_{pl,2}$ +n•Nb•$F_{t,Rd}$)/(m+n)	(2•5798.2 + 44.40•2•141.1)/(35.95 + 44.40)	300.3 kN	
$F_{T,Rd}$ =min($F_{T,Rd}$ mode1,2,3)	min(776.4, 300.3, 282.2)	282.2 kN	

Beam Web Tension row 2 only

$F_{t,wb,Rd}$ =$l_{eff,1}$ •t_{wb} •$f_{y,wb}$/γ_{M0}	218.8•8.5•275/1.00	511.4 kN	

Column Flange rows 1 to 2 combined

l_{eff},cp(Row 1)=PI•m	PI•29.39	92.3 mm	
l_{eff},nc(Row 1)=ex	80.00	80 mm	
l_{eff},cp(Row 2)=PI•m	PI•29.39	92.3 mm	
l_{eff},nc(Row 2)=2m+0.625e	2•29.39+0.625•44.40	86.5 mm	
$l_{eff,cp}$=$l_{eff,cp(R1)}$+2P+$l_{eff,cp(R2)}$	92.3 + 2•90.0 + 92.3	364.7 mm	
$l_{eff,ncp}$=$l_{eff,ncp(R1)}$+P+$l_{eff,ncp(R2)}$	80.0 + 90.0 + 86.5	256.5 mm	
$l_{eff,1}$=min($l_{eff,cp}$, $l_{eff,ncp}$)	Min(364.7, 256.5)	256.5 mm	
$l_{eff,2}$=$l_{eff,ncp}$	256.5	256.5 mm	
$M_{pl,1}$ =$l_{eff,1}$ •t_f^2•p_y/4/γ_{M0}	256.5•15.0•15.0•275.0/4/1.0	3968.2 kN.mm	

MasterSeries Sales Team
10002
3 Castle Street
Carrickfergus
Co. Antrim BT38 7BE
Tel : 028 9036 5950

Job Ref : **1472**
Sheet : **C / 664**
Made by : **Tommy White**
Date : **04 August 2017 / Ver. 2017.08**
Checked :
Approved :

$M_{pl,2} = l_{eff,2} \cdot t_f^2 \cdot p_y/4/\gamma_{M0}$	256.5•15.0•15.0•275.0/4/1.0	3968.2 kN.mm	
$2 \cdot m \cdot n - e_w \cdot (m+n)$	2•29.39•36.74-9.25•(29.39+36.74)	1547.8	
$F_{T,1,Rd} = (8 \cdot n - 2 \cdot e_w) \cdot M_{pl,1} / 1547.8$	(8•36.74-2•9.25)•3968.2/1547.8	706.1 kN	
$F_{T,2,Rd} = (2 \cdot M_{pl,2} + n \cdot Nb \cdot F_{t,Rd})/(m+n)$	(2•3968.2 + 36.74•4•141.1)/(29.39 + 36.74)	433.6 kN	
$F_{T,Rd} = \min(F_{T,Rd}$ mode1,2,3)	min(706.1, 433.6, 564.5)	433.6 kN	
$F_{t2,Rd} = F_{T,Rd} - F_{t,Rd}1,1$	433.6 - 234.7	198.9 kN	

Column Web Tension rows 1 to 2 combined

$\omega = fn(l_{eff} \cdot t_w, A_{vc}, \beta)$	fn(256.5, 10.9, 6929, 1.00)	0.91	
$F_{t,wc,Rd} = \omega \cdot l_{eff,1} \cdot t_{wc} \cdot f_{y,wc}/\gamma_{M0}$	0.91•256.5•10.9•275/1.00	698.5 kN	
$F_{t2,Rd} = F_{T,Rd} - F_{t,Rd}1,1$	698.5 - 234.7	463.8 kN	

End-Plate rows 1 to 2 combined

l_{eff},cp(Row 1)=PI•m	PI•35.95	112.9 mm	
l_{eff},nc(Row 1)=α•m-(2m+0.625e)	6.56•35.95-(2•35.95+0.625•60.00)	126.3 mm	
l_{eff},cp(Row 2)=PI•m	PI•35.95	112.9 mm	
l_{eff},nc(Row 2)=2m+0.625e	2•35.95+0.625•60.00	109.4 mm	
$l_{eff,cp} = l_{eff,cp(R1)} + 2P + l_{eff,cp(R2)}$	112.9 + 2•90.0 + 112.9	405.9 mm	
$l_{eff,ncp} = l_{eff,ncp(R1)} + P + l_{eff,ncp(R2)}$	126.3 + 90.0 + 109.4	325.7 mm	
$l_{eff,1} = \min(l_{eff,cp}, l_{eff,ncp})$	Min(405.9, 325.7)	325.7 mm	
$l_{eff,2} = l_{eff,ncp}$	325.7	325.7 mm	
$M_{pl,1} = l_{eff,1} \cdot t_f^2 \cdot p_y/4/\gamma_{M0}$	325.7•20.0•20.0•265.0/4/1.0	8630.8 kN.mm	
$M_{pl,2} = l_{eff,2} \cdot t_f^2 \cdot p_y/4/\gamma_{M0}$	325.7•20.0•20.0•265.0/4/1.0	8630.8 kN.mm	
$2 \cdot m \cdot n - e_w \cdot (m+n)$	2•35.95•44.40-8.25•(35.95+44.40)	2529.5	
$F_{T,1,Rd} = (8 \cdot n - 2 \cdot e_w) \cdot M_{pl,1} / 2529.5$	(8•44.40-2•8.25)•8630.8/2529.5	1155.7 kN	
$F_{T,2,Rd} = (2 \cdot M_{pl,2} + n \cdot Nb \cdot F_{t,Rd})/(m+n)$	(2•8630.8 + 44.40•4•141.1)/(35.95 + 44.40)	526.8 kN	
$F_{T,Rd} = \min(F_{T,Rd}$ mode1,2,3)	min(1155.7, 526.8, 564.5)	526.8 kN	
$F_{t2,Rd} = F_{T,Rd} - F_{t,Rd}1,1$	526.8 - 234.7	292.0 kN	

Beam Web Tension rows 1 to 2 combined

$F_{t,wb,Rd} = l_{eff,1} \cdot t_{wb} \cdot f_{y,wb}/\gamma_{M0}$	325.7•8.5•275/1.00	761.3 kN	
$F_{t2,Rd} = F_{T,Rd} - F_{t,Rd}1,1$	761.3 - 234.7	526.6 kN	
Potential resistance of Bolt Row 2	$F_{t2,Rd}$	198.9 kN	Mode 2

BOLT ROW 3

Column Flange row 3 only

m, e	29.4, 44.4		
l_{eff} modes	$l_{eff,cp}$ = 184.7, $l_{eff,ncp}$ = 173.1		T2.2 (e)
Mode 1 $l_{eff,1} = \min(l_{eff,cp}, l_{eff,cnp})$	min(184.7, 173.1)	173.1 mm	
Mode 2 $l_{eff,2} = l_{eff,ncp}$	173.1	173.1 mm	
$M_{pl,1} = l_{eff,1} \cdot t_f^2 \cdot p_y/4/\gamma_{M0}$	173.1•15.0•15.0•275.0/4/1.0	2677.0 kN.mm	
$M_{pl,2} = l_{eff,2} \cdot t_f^2 \cdot p_y/4/\gamma_{M0}$	173.1•15.0•15.0•275.0/4/1.0	2677.0 kN.mm	
$2 \cdot m \cdot n - e_w \cdot (m+n)$	2•29.39•36.74-9.25•(29.39+36.74)	1547.8	
$F_{T,1,Rd} = (8 \cdot n - 2 \cdot e_w) \cdot M_{pl,1} / 1547.8$	(8•36.74-2•9.25)•2677.0/1547.8	476.3 kN	
$F_{T,2,Rd} = (2 \cdot M_{pl,2} + n \cdot Nb \cdot F_{t,Rd})/(m+n)$	(2•2677.0 + 36.74•2•141.1)/(29.39 + 36.74)	237.8 kN	
$F_{T,Rd} = \min(F_{T,Rd}$ mode1,2,3)	min(476.3, 237.8, 282.2)	237.8 kN	

Column Web Tension row 3 only

$\omega = fn(l_{eff} \cdot t_w, A_{vc}, \beta)$	fn(173.1, 10.9, 6929, 1.00)	0.96	
$F_{t,wc,Rd} = \omega \cdot l_{eff,1} \cdot t_{wc} \cdot f_{y,wc}/\gamma_{M0}$	0.96•173.1•10.9•275/1.00	495.4 kN	

End Plate row 3 only

m, e	36.0, 60.0		
l_{eff} modes	$l_{eff,cp}$ = 225.9, $l_{eff,ncp}$ = 218.8		T2.2 (e)
Mode 1 $l_{eff,1} = \min(l_{eff,cp}, l_{eff,cnp})$	min(225.9, 218.8)	218.8 mm	
Mode 2 $l_{eff,2} = l_{eff,ncp}$	218.8	218.8 mm	
$M_{pl,1} = l_{eff,1} \cdot t_f^2 \cdot p_y/4/\gamma_{M0}$	218.8•20.0•20.0•265.0/4/1.0	5798.2 kN.mm	
$M_{pl,2} = l_{eff,2} \cdot t_f^2 \cdot p_y/4/\gamma_{M0}$	218.8•20.0•20.0•265.0/4/1.0	5798.2 kN.mm	
$2 \cdot m \cdot n - e_w \cdot (m+n)$	2•35.95•44.40-8.25•(35.95+44.40)	2529.5	
$F_{T,1,Rd} = (8 \cdot n - 2 \cdot e_w) \cdot M_{pl,1} / 2529.5$	(8•44.40-2•8.25)•5798.2/2529.5	776.4 kN	
$F_{T,2,Rd} = (2 \cdot M_{pl,2} + n \cdot Nb \cdot F_{t,Rd})/(m+n)$	(2•5798.2 + 44.40•2•141.1)/(35.95 + 44.40)	300.3 kN	
$F_{T,Rd} = \min(F_{T,Rd}$ mode1,2,3)	min(776.4, 300.3, 282.2)	282.2 kN	

Beam Web Tension row 3 only

$F_{t,wb,Rd} = l_{eff,1} \cdot t_{wb} \cdot f_{y,wb}/\gamma_{M0}$	218.8•8.5•275/1.00	511.4 kN	

Column Flange rows 2 to 3 combined

l_{eff},cp(Row 2)=PI•m	PI•29.39	92.3 mm	
l_{eff},nc(Row 2)=2m+0.625e	2•29.39+0.625•44.40	86.5 mm	
l_{eff},cp(Row 3)=PI•m	PI•29.39	92.3 mm	
l_{eff},nc(Row 3)=2m+0.625e	2•29.39+0.625•44.40	86.5 mm	
$l_{eff,cp} = l_{eff,cp(R2)} + 2P + l_{eff,cp(R3)}$	92.3 + 2•90.0 + 92.3	364.7 mm	
$l_{eff,ncp} = l_{eff,ncp(R2)} + P + l_{eff,ncp(R3)}$	86.5 + 90.0 + 86.5	263.1 mm	
$l_{eff,1} = \min(l_{eff,cp}, l_{eff,ncp})$	Min(364.7, 263.1)	263.1 mm	

MasterSeries Sales Team
10002
3 Castle Street
Carrickfergus
Co. Antrim BT38 7BE
Tel : 028 9036 5950

Job Ref : **1472**
Sheet : **C / 665**
Made by : **Tommy White**
Date : **04 August 2017 / Ver. 2017.08**
Checked :
Approved :

$l_{eff,2}=l_{eff,ncp}$	263.1	263.1 mm
$M_{pl,1}=l_{eff,1}\cdot t_f^2\cdot p_y/4/\gamma_{M0}$	263.1•15.0•15.0•275.0/4/1.0	4069.2 kN.mm
$M_{pl,2}=l_{eff,2}\cdot t_f^2\cdot p_y/4/\gamma_{M0}$	263.1•15.0•15.0•275.0/4/1.0	4069.2 kN.mm
$2\cdot m\cdot n-e_w\cdot(m+n)$	2•29.39•36.74-9.25•(29.39+36.74)	1547.8
$F_{T,1,Rd}=(8\cdot n-2\cdot e_w)\cdot M_{pl,1}/1547.8$	(8•36.74-2•9.25)•4069.2/1547.8	724.1 kN
$F_{T,2,Rd}=(2\cdot M_{pl,2}+n\cdot Nb\cdot F_{t,Rd})/(m+n)$	(2•4069.2 + 36.74•4•141.1)/(29.39 + 36.74)	436.7 kN
$F_{T,Rd}=\min(F_{T,Rd}$ mode1,2,3)	min(724.1, 436.7, 564.5)	436.7 kN
$F_{t3,Rd}=F_{T,Rd}-F_{t,Rd}2,2$	436.7 - 198.9	237.8 kN

Column Web Tension rows 2 to 3 combined

$\omega=fn(l_{eff}\ t_w, A_{vc}, \beta)$	fn(263.1, 10.9, 6929, 1.00)	0.90
$F_{t,wc,Rd}=\omega\cdot l_{eff,1}\cdot t_{wc}\cdot f_{y,wc}/\gamma_{M0}$	0.90•263.1•10.9•275/1.00	713.1 kN
$F_{t3,Rd}=F_{T,Rd}-F_{t,Rd}2,2$	713.1 - 198.9	514.2 kN

Column Flange rows 1 to 3 combined

l_{eff},cp(Row 1)=PI•m	PI•29.39	92.3 mm
l_{eff},nc(Row 1)=ex	80.00	80 mm
l_{eff},cp(Row 3)=PI•m	PI•29.39	92.3 mm
l_{eff},nc(Row 3)=2m+0.625e	2•29.39+0.625•44.40	86.5 mm
$l_{eff,cp}=l_{eff,cp(R1)}+2P+l_{eff,cp(R3)}$	92.3 + 2•180.0 + 92.3	544.7 mm
$l_{eff,ncp}=l_{eff,ncp(R1)}+P+l_{eff,ncp(R3)}$	80.0 + 180.0 + 86.5	346.5 mm
$l_{eff,1}=\min(l_{eff,cp}, l_{eff,ncp})$	Min(544.7, 346.5)	346.5 mm
$l_{eff,2}=l_{eff,ncp}$	346.5	346.5 mm
$M_{pl,1}=l_{eff,1}\cdot t_f^2\cdot p_y/4/\gamma_{M0}$	346.5•15.0•15.0•275.0/4/1.0	5360.4 kN.mm
$M_{pl,2}=l_{eff,2}\cdot t_f^2\cdot p_y/4/\gamma_{M0}$	346.5•15.0•15.0•275.0/4/1.0	5360.4 kN.mm
$2\cdot m\cdot n-e_w\cdot(m+n)$	2•29.39•36.74-9.25•(29.39+36.74)	1547.8
$F_{T,1,Rd}=(8\cdot n-2\cdot e_w)\cdot M_{pl,1}/1547.8$	(8•36.74-2•9.25)•5360.4/1547.8	953.8 kN
$F_{T,2,Rd}=(2\cdot M_{pl,2}+n\cdot Nb\cdot F_{t,Rd})/(m+n)$	(2•5360.4 + 36.74•6•141.1)/(29.39 + 36.74)	632.5 kN
$F_{T,Rd}=\min(F_{T,Rd}$ mode1,2,3)	min(953.8, 632.5, 846.7)	632.5 kN
$F_{t3,Rd}=F_{T,Rd}-F_{t,Rd}2,1$	632.5 - 433.6	198.9 kN

Column Web Tension rows 1 to 3 combined

$\omega=fn(l_{eff}\ t_w, A_{vc}, \beta)$	fn(346.5, 10.9, 6929, 1.00)	0.85
$F_{t,wc,Rd}=\omega\cdot l_{eff,1}\cdot t_{wc}\cdot f_{y,wc}/\gamma_{M0}$	0.85•346.5•10.9•275/1.00	882.2 kN
$F_{t3,Rd}=F_{T,Rd}-F_{t,Rd}2,1$	882.2 - 433.6	448.6 kN

End-Plate rows 2 to 3 combined

l_{eff},cp(Row 2)=PI•m	PI•35.95	112.9 mm
l_{eff},nc(Row 2)=2m+0.625e	2•35.95+0.625•60.00	109.4 mm
l_{eff},cp(Row 3)=PI•m	PI•35.95	112.9 mm
l_{eff},nc(Row 3)=2m+0.625e	2•35.95+0.625•60.00	109.4 mm
$l_{eff,cp}=l_{eff,cp(R2)}+2P+l_{eff,cp(R3)}$	112.9 + 2•90.0 + 112.9	405.9 mm
$l_{eff,ncp}=l_{eff,ncp(R2)}+P+l_{eff,ncp(R3)}$	109.4 + 90.0 + 109.4	308.8 mm
$l_{eff,1}=\min(l_{eff,cp}, l_{eff,ncp})$	Min(405.9, 308.8)	308.8 mm
$l_{eff,2}=l_{eff,ncp}$	308.8	308.8 mm
$M_{pl,1}=l_{eff,1}\cdot t_f^2\cdot p_y/4/\gamma_{M0}$	308.8•20.0•20.0•265.0/4/1.0	8183.2 kN.mm
$M_{pl,2}=l_{eff,2}\cdot t_f^2\cdot p_y/4/\gamma_{M0}$	308.8•20.0•20.0•265.0/4/1.0	8183.2 kN.mm
$2\cdot m\cdot n-e_w\cdot(m+n)$	2•35.95•44.40-8.25•(35.95+44.40)	2529.5
$F_{T,1,Rd}=(8\cdot n-2\cdot e_w)\cdot M_{pl,1}/2529.5$	(8•44.40-2•8.25)•8183.2/2529.5	1095.7 kN
$F_{T,2,Rd}=(2\cdot M_{pl,2}+n\cdot Nb\cdot F_{t,Rd})/(m+n)$	(2•8183.2 + 44.40•4•141.1)/(35.95 + 44.40)	515.6 kN
$F_{T,Rd}=\min(F_{T,Rd}$ mode1,2,3)	min(1095.7, 515.6, 564.5)	515.6 kN
$F_{t3,Rd}=F_{T,Rd}-F_{t,Rd}2,2$	515.6 - 198.9	316.7 kN

Beam Web Tension rows 2 to 3 combined

$F_{t,wb,Rd}=l_{eff,1}\cdot t_{wb}\cdot f_{y,wb}/\gamma_{M0}$	308.8•8.5•275/1.00	721.8 kN
$F_{t3,Rd}=F_{T,Rd}-F_{t,Rd}2,2$	721.8 - 198.9	522.9 kN

End-Plate rows 1 to 3 combined

l_{eff},cp(Row 1)=PI•m	PI•35.95	112.9 mm
l_{eff},nc(Row 1)=α•m-(2m+0.625e)	6.56•35.95-(2•35.95+0.625•60.00)	126.3 mm
l_{eff},cp(Row 3)=PI•m	PI•35.95	112.9 mm
l_{eff},nc(Row 3)=2m+0.625e	2•35.95+0.625•60.00	109.4 mm
$l_{eff,cp}=l_{eff,cp(R1)}+2P+l_{eff,cp(R3)}$	112.9 + 2•180.0 + 112.9	585.9 mm
$l_{eff,ncp}=l_{eff,ncp(R1)}+P+l_{eff,ncp(R3)}$	126.3 + 180.0 + 109.4	415.7 mm
$l_{eff,1}=\min(l_{eff,cp}, l_{eff,ncp})$	Min(585.9, 415.7)	415.7 mm
$l_{eff,2}=l_{eff,ncp}$	415.7	415.7 mm
$M_{pl,1}=l_{eff,1}\cdot t_f^2\cdot p_y/4/\gamma_{M0}$	415.7•20.0•20.0•265.0/4/1.0	11015.8 kN.mm
$M_{pl,2}=l_{eff,2}\cdot t_f^2\cdot p_y/4/\gamma_{M0}$	415.7•20.0•20.0•265.0/4/1.0	11015.8 kN.mm
$2\cdot m\cdot n-e_w\cdot(m+n)$	2•35.95•44.40-8.25•(35.95+44.40)	2529.5
$F_{T,1,Rd}=(8\cdot n-2\cdot e_w)\cdot M_{pl,1}/2529.5$	(8•44.40-2•8.25)•11015.8/2529.5	1475.0 kN
$F_{T,2,Rd}=(2\cdot M_{pl,2}+n\cdot Nb\cdot F_{t,Rd})/(m+n)$	(2•11015.8 + 44.40•6•141.1)/(35.95 + 44.40)	742.1 kN
$F_{T,Rd}=\min(F_{T,Rd}$ mode1,2,3)	min(1475.0, 742.1, 846.7)	742.1 kN
$F_{t3,Rd}=F_{T,Rd}-F_{t,Rd}2,1$	742.1 - 433.6	308.5 kN

Beam Web Tension rows 1 to 3 combined

MasterSeries Sales Team
3 Castle Street
Carrickfergus
Co. Antrim BT38 7BE
Tel : 028 9036 5950

10002

Job Ref : **1472**
Sheet : **C / 666**
Made by : **Tommy White**
Date : **04 August 2017 / Ver. 2017.08**
Checked :
Approved :

$F_{t,wb,Rd} = l_{eff,1} \cdot t_{wb} \cdot f_{y,wb}/\gamma_{M0}$	415.7•8.5•275/1.00	971.7 kN	
$F_{t3,Rd}=F_{T,Rd}-F_{t,Rd}2,1$	971.7 - 433.6	538.1 kN	
Potential resistance of Bolt Row 3	$F_{t3,Rd}$	198.9 kN	Mode 2

Step 1C Plastic distribution Limit

$T_p < d/1.9 \cdot \sqrt{(f_{ub}/f_{yp})}$	$20.0 < 20/1.9 \cdot \sqrt{(800.0/265)}$	20.0>18.3	Elastic
$T_{fc} < d/1.9 \cdot \sqrt{(f_{ub}/f_{y,fc})}$)	$15.0 < 20/1.9 \cdot \sqrt{(800.0/275)}$	15.0 <= 18.0	Plastic
$F_{t\,1,Rd} < 1.9\ F_{t,rd}$	234.7 < 1.9•141.1		Plastic
Classification	Plastic Deformation occurs.	Use Plastic distribution	

Potential Tension Capacity

Sigma $F_{ti,Rd}$	234.7 + 198.9 + 198.9 kN	632.5 kN

Step 2 & 6B: Compression Zone

Web Bearing

$n = \min(5, 2+0.6 \cdot B_e/(t_{fc}+s))$	min(5, 2 + 0.6•380.0/27.7)	5.000
$h_{-ff,c}=t_{fb}+2s_f+n(t_{fc}+s)+s_p)$	13.40+2•8.0+5.000(15.00+12.70)+32.00	199.9
$\omega=fn(l_{eff}, t_w, A_{vc}, \beta)$	fn(199.9, 10.9, 6929, 1.00)	0.94
$b_{sn}=b_{tfc}/2-t_{wc}$-snipe	178.8/2 - 10.9 - 15.0	63.0 mm
$N_{c,Rd} = (2 \cdot b_{sn} \cdot ts + b_{eff,c} \cdot t_{wc}) \cdot f_{y,wc}/\gamma_{M0}$	(2•63.0•12+199.9•10.9)•275/1.00	1015.0 kN

Web Buckling

$A_{s,eff} = 2 \cdot b_{sg} \cdot t_s + L_w \cdot t_w$	2•80.0•12.0 + 314.3•10.9	5346 mm²
$I_s=t_s(2 \cdot b_{sg}+t_{wc})^3/12$	$12.0(2 \cdot 80.0 + 10.9)^3/12$	4991444 mm⁴
$i_s=\sqrt{(I_S/A_{s,eff})}$	$\sqrt{(4991444/5346)}$	30.56 mm
$\lambda=(h_c-2 \cdot t_{fc})/i_s$	(603.0 - 2•15.0)/30.56	0.22
$\kappa=\min(1.0, 1/(\phi+\sqrt{(\phi^2-\lambda^2)}))$	$\min(1.0, 1/(0.53 + \sqrt{(0.53^2-0.22^2)}))$	0.992
$N_{b,Rd} = \kappa \cdot A_{s,eff} \cdot f_y/\gamma_{M1}$	0.99•5345.7•275/1.00	1458.1 kN

Beam Compression

Beam Compression Zone	Flange in Compression Utilising 40% OverStressing	
Total Area Flange	189.9•12.7	24.1 cm²
$F_{c,fb,Rd}$	24.1•275•1.40	928.5 kN

Step 3: Column Web Shear

$V_{wp,Rd}=0.9 \cdot f_{yc} \cdot A_{vc}/(\gamma_{M0} \cdot \sqrt{3})$	$0.9 \cdot 275 \cdot 6928.5/(1.0 \cdot \sqrt{3})$	990.0 kN

Potential Compression Capacity

$F_{c,Rd}$min	Min(1015.0, 1458.1, 928.5)	928.5 kN	OK

Step 4: Moment Capacity

$F_{c,Rd} = \mathrm{Min}(F_{c,wc,Rd}, F_{c,fc,Rd})$	min(1015.0, 928.5)	928.5 kN
Shear limit $F_{ri}=\min(F_{t,Rd}\ \mathrm{Total}, V_{wp,Rd})$	min(632.5, 990.0)	632.5 kN
$F_{t,Rd}$ Total $< \mathrm{Min}(F_{c,Rd} - N_{Ed}, V_{wp,Rd})$	No reduction in bolt forces required	

Final Bolt Forces and Moment Capacities

Bolt row 3 $M_{c,Rd}3 = F_{t3,Rd} \cdot h_3$	198.9•653.7	130.0 kN.m	
Bolt row 2 $M_{c,Rd}2 = F_{t2,Rd} \cdot h_2$	198.9•743.7	147.9 kN.m	
Bolt row 1 $M_{c,Rd}1 = F_{t1,Rd} \cdot h_1$	234.7•833.7	195.7 kN.m	
$M_{c,Rd}$		473.6 kN.m	
$M_{mod,Ed} = M - N_{Ed} \cdot h_n$	450.0 - 60.0•665.0	410.1 kN.m	OK
$F_{ri,Ed}$ for 3 rows	234.7, 198.9, 198.9	632.5 kN	
$F_{ri,Ed}$ design$=F_{ri,Ed} \cdot M_{Ed}/M_{c,Rd}'$	632.5•410.1/473.6	547.7 kN	

Step 5: Shear Bolts

$F_{v,Rd}=\alpha_v \cdot f_{ub} \cdot A / \gamma_{M2}$	0.6 • 800 • 245.0 / 1.25	94.1 kN	
Bearing $F_{b,Rd,End}$-End Plate, End	e1=80, e2=60, k_1=2.5, α_b=1.00, d=20, t=20, f_u=410	328.0 kN	
Bearing $F_{b,Rd}$-End Plate, Inner	p1=90, e2=60, k_1=2.5, α_b=1.00, d=20, t=20, f_u=410	328.0 kN	
Bearing $F_{b,Rd,End}$-Col Flange, End	e1=80, e2=44, k_1=2.5, α_b=1.00, d=20, t=15, f_u=410	246.0 kN	
Bearing $F_{b,Rd}$-Column Flange, Inner	p1=79, e2=44, k_1=2.5, α_b=0.95, d=20, t=15, f_u=410	233.0 kN	
$F_{v,Rd,Sh}$=Min(bearing, shear)	Min(328.0, 233.0, 94.1)	94.1 kN	
$F_{v,Rd,T}=\min(F_{b,Rd},0.28 \cdot shr)$	Min(328.0, 233.0, 26.3)	26.3 kN	
$F_{v,Rd,TEnd}=\min(F_{b,Rd,End},0.28 \cdot shr)$	Min(328.0, 246.0, 26.3)	26.3 kN	
Shear$=Ns \cdot F_{v,Rd,Sh}$	2•94.1	188.2 kN	
Tension$= (Nt-1) \cdot F_{v,Rd,T} + F_{v,Rd,TEnd}$	4•26.3 + 2•26.3	158.1 kN	
$F_{v,Rd}$ Total=Shear+Tension	188.2 + 158.1	346 kN	OK

MasterSeries Sales Team
10002
3 Castle Street
Carrickfergus
Co. Antrim BT38 7BE
Tel : 028 9036 5950

Job Ref : **1472**
Sheet : **C / 667**
Made by : **Tommy White**
Date : **04 August 2017 / Ver. 2017.08**
Checked :
Approved :

Steps 7&8: Welds

Beam $f_{vw,d}=f_u/(\sqrt{3}\cdot ß_w)/\gamma_{M2}$	410.0 / √3 / 0.85 / 1.25	222.8 N/mm²	

Flange Tension Weld

$Ft_{,flng}=\min(B\cdot T\cdot P_y, F_{r1}+F_{r2})$	Min(189.9•12.7•275, 203.2 + 172.2)	375.5 kN	
$F_{vw,Rd}=2\cdot K\cdot 0.7\cdot t_s\cdot L\cdot f_{vw,d}$	2•1.225•0.7•8•(189.9 - 2•0.7•8)•223	551.3 kN	OK

Flange Compression Weld

Direct Bearing assumed. No check required

Web Welds in Tension Zone

Web Weld OK if >= 0.69•T	6 >= 0.69•8.5	>= 5.8 mm	OK

Web Welds in Shear Zone

$Lws=D-(T_t+T_b)-r_t-r_b-Lwt$	900.0 - 26.1 - 10.2 - 10.2 - 295	558.6 mm	
$F_{wCap}=2\cdot 0.7\cdot ts\cdot Lws\cdot f_{vw,d}$	2•0.7•6•558.6•223	1055.7 kN	OK

Haunch Welds

$F_h,Ed=\min(M_h/(h_c-t_{fb}), b_b\cdot t_{fb}\cdot f_y)$	Min(350.0/(453.4 - 12.7), 189.9•12.7•275)	663.2 kN	
Haunch/Beam Flange area ratio, α	189.9•12.7/(189.9•12.7 + 189.9•12.7)	0.50	
$F_{hnch}=F_h\cdot\min(0.5, \alpha)$	663.2•min(0.5, 0.50)	331.6 kN	
$Fh_{comp}=(Ft+N)/Cos(\theta)$	547.7 + 60.0 / Cos(7.5)	613.0 kN	

Haunch End Weld

$t=\min(S_{hw}, t_f)\cdot Cos((90-ThetaH1)/2)$	min(12, 12.7)•Cos((90-11.0)/2)	9.3 mm	
$K=\sqrt{(3/(1+2\cdot Cos((90-ThetaH1)/2)^2))}$	$\sqrt{(3/(1+2\cdot Cos((90-11.0)/2)^2)}$	1.17	
$End_{Cap}=K\cdot t(B-2\cdot w)\cdot f_{vw,d}$	1.170•9.3•(189.9 - 2•0.7•12)•223	417.5 kN	
$End_{Cap}>= F_{hnch}$	417.5 >= 331.6	331.6 kN	OK

Haunch Web Weld

Web force $F_{wh}=Fh_{comp}-F_{hnch}$	613.0 - 331.6	281.3 kN	
$L_w=(H_l-D_c/2-T_{ep})/Cos(Theta)$	(2500 - 603.0/2 - 20)/Cos(7.5)	2197.3 mm	
$L_w=L_w-t_w-(T+t_{w1})/Sin(Theta1)$	2197.3 - 6 -(12.7 + 6)/Sin(11.0)= 2197.3-6-97.9	2093.4 mm	
$Web_{Cap}=2\cdot 0.7\cdot t(L_w-2\cdot t)\cdot f_{vw,d}$	2•0.7•6(2093.4 - 2•0.7•6)•223	3901.8 kN	
$Web_{Cap}>= F_{wh}$	3901.8 >= 281.3	281.3 kN	OK

Compression Stiffener Web Weld

Column $f_{vw,d}=f_u/(\sqrt{3}\cdot ß_w)/\gamma_{M2}$	410.0 / √3 / 0.85 / 1.25	222.8 N/mm²	
$F_{app}=F_t+N$	547.7 + 60.0	607.7 kN	
$F_{wCap}=2\cdot 2\cdot 0.7\cdot t_s(D-2(T+r))\cdot f_{vw,d}$	2•2•0.7•8(603.0 - 2(15.0 + 12.7))•223	2760.1 kN	OK

Step 8: End of Haunch Compression Zone

Force Applied - Transverse to Beam Web

$F_{T,Ed}=F_{hnch}\cdot Tan(ThetaH1)$	331.6•Tan(11.0)	64.5 kN	

Web Bearing

$n=\min(5,2+0.6\cdot B_e/(t_{fb}+s))$	min(5, 2 + 0.6•453.4/22.9)	5.000	
$b_{eff,b}=t_{fb}+2s_f+n(t_{fb}+s)+s_p)$	12.00+2•0.0+5.000(12.70+10.20)+0.00	126.5	
$\omega=fn(l_{eff}, t_w, A_{vc}, ß)$	fn(126.5, 10.9, 4094, 1.00)	0.96	
$b_{sn}=b_{tfb}/2-t_{wb}-snipe$	189.9/2 - 8.5 - 10.0	76.0 mm	
$N_{b,Rd}=(2\cdot b_{sn}\cdot ts+b_{eff,b}\cdot t_{wb})\cdot f_{y,wb}/\gamma_{M0}$	(2•76.0•8+126.5•8.5)•275/1.00	630.1 kN	OK

Web Buckling

$A_{s,eff}=2\cdot b_{sg}\cdot t_s+L_w\cdot t_w$	2•90.0•8.0 + 243.7•8.5	3512 mm²	
$I_s=t_s(2\cdot b_{sg}+t_{wb})^3/12$	$8.0(2\cdot 90.0 + 8.5)^3/12$	4465220 mm⁴	
$i_s=\sqrt{(I_S/A_{s,eff})}$	√(4465220/3512)	35.66 mm	
$\lambda=(h_b-2\cdot t_{fb})/i_s$	(453.4 - 2•12.7)/35.66	0.14	
$\kappa=\min(1.0, 1/(\phi+\sqrt{(\phi^2-\lambda^2)}))$	$\min(1.0, 1/(0.49 + \sqrt{(0.49^2-0.14^2)}))$	1.000	
$N_{b,Rd}=\kappa\cdot A_{s,eff}\cdot f_y/\gamma_{M1}$	1.00•3511.7•275/1.00	965.7 kN	OK

MasterSeries Sales Team
3 Castle Street
Carrickfergus
Co. Antrim BT38 7BE
Tel : 028 9036 5950

10002

Job Ref	**: 1472**
Sheet	**: C / 669**
Made by	**: Tommy White**
Date	**: 04 August 2017 / Ver. 2017.08**
Checked	**:**
Approved	**:**

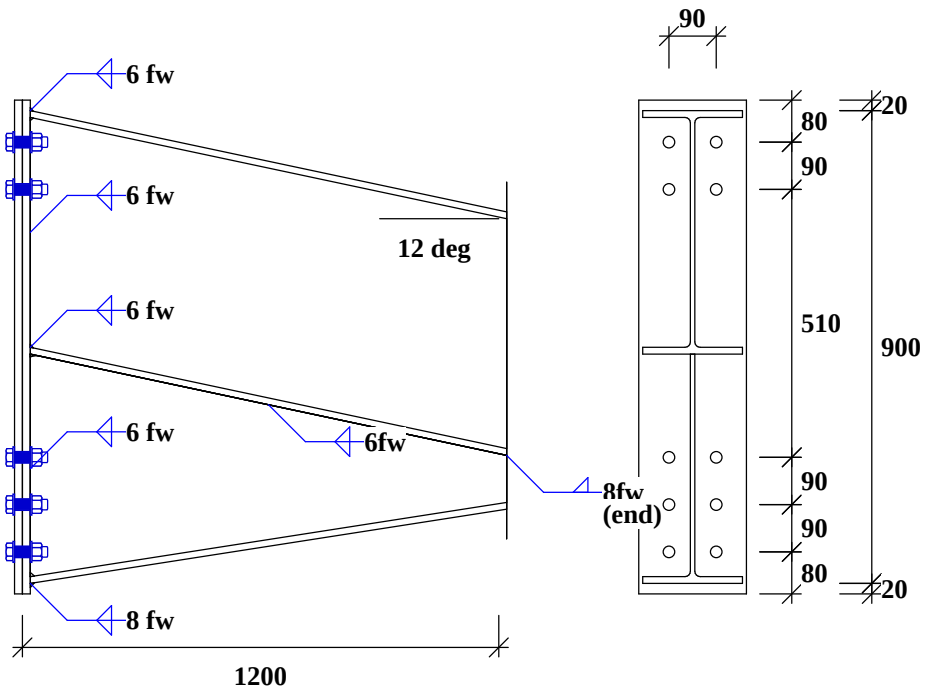

Plates S 275
Beam 457x191 UB 67 [S275]
Haunch 457x191 UB 67 [S275]

End-Plate 940 x 205 x 15 mm (23 kg)
10 No. M20 Grade 8.8 Bolts in 22 mm holes

Apex Joint
Beam to Beam End-Plated Connection to EC 3 (UK NAD)
Loading Case 001
Basic Data

User Defined Applied Forces at End-plate Interface

Right Rafter Forces M, Fvr, Fr	-150.0 kNm, 400.0 kN, 300.0 kN
Resultant Forces M, Fv, F	-150.0 kNm, 328.9 kN, 376.6 kN
Load directions	Bottom of Joint in Tension, Rafter moving Down and in Compression.
Design to	EC 3: Part 1-8: 2005 Design of Joints
	SCI Green Book
	P398: Joints in steel construction: Moment-Resisting Joints to Eurocode 3
Weld Grades	All weld grades provided to suit minimum connected steel grade

Basic Dimensions

Rafter-457x191UB67 [28]	D=453.4, B=189.9, T=12.7, t=8.5, r=10.2, py=275		
Haunch-457x191UB67 [28]	D=453.4, B=189.9, T=12.7, t=8.5, r=10.2, py=275		
Bolts 20 mm Ø in 22 mm holes	Grade 8.8 Bolts		
Plates S 275	All weld grades provided to suit minimum connected steel grade		
Rafter Capacities Mc, Fvc, Fc	1046.2 kN.m, 1252.6 kN, 3395.2 kN	Fvc = 1252.6 kN	OK

Summary of Results (Unity Ratios)

Moment Capacity 524.4 kNm (for 4 rows of bolts) (Modified Applied Mom. M_{mod}=66.6 kNm)		0.13	OK
Moment Capacity 203.7 kNm (for the 1 rows of bolts required in the tension zone)		0.33	OK
Shear Capacity		0.41	OK
Flange Welds	0.15	0.15	OK
Web Welds	0.49, 0.24	0.49	OK
Haunch Welds	0.58, 0.23	0.58	OK

MasterSeries Sales Team
3 Castle Street
Carrickfergus
Co. Antrim BT38 7BE
Tel : 028 9036 5950

10002

Job Ref	**: 1472**
Sheet	**: C / 670**
Made by	**: Tommy White**
Date	**: 04 August 2017 / Ver. 2017.08**
Checked	**:**
Approved	**:**

Step 1: Tension Zone

Basics

Bm/Plt b_p, W, t_{wb}, S_w, m_p, e_p, n_p	205.0, 90, 8.5, 6, 36.0, 57.5, 44.9		
$F_{t,Rd}=k_2 \cdot f_{ub} \cdot A / \gamma_{m2}$	0.90•800•245/1.25	141.1 kN	
$F_{T,3,Rd}=\sum F_{t,Rd}$	2•141.1	282.2 kN	

BOLT ROW 1

End Plate row 1 only

m, e, mx, α	36.0, 57.5, 40.8, 6.5		
l_{eff} modes	$l_{eff,cp}$ = 225.9, $l_{eff,ncp}$ = 232.0		T2.2 (c)
Mode 1 $l_{eff,1}=\min(l_{eff,cp}, l_{eff,cnp})$	min(225.9, 232.0)	225.9 mm	
Mode 2 $l_{eff,2}=l_{eff,ncp}$	232.0	232.0 mm	
$M_{pl,1}=l_{eff,1} \cdot t_f^2 \cdot p_y/4/\gamma_{M0}$	225.9•15.0•15.0•275.0/4/1.0	3494.1 kN.mm	
$M_{pl,2}=l_{eff,2} \cdot t_f^2 \cdot p_y/4/\gamma_{M0}$	232.0•15.0•15.0•275.0/4/1.0	3588.0 kN.mm	
$2 \cdot m \cdot n - e_w \cdot (m+n)$	2•35.95•44.94-8.25•(35.95+44.94)	2563.7	
$F_{T,1,Rd}=(8 \cdot n-2 \cdot e_w) \cdot M_{pl,1}/2563.7$	(8•44.94-2•8.25)•3494.1/2563.7	467.5 kN	
$F_{T,2,Rd}=(2 \cdot M_{pl,2}+n \cdot Nb \cdot F_{t,Rd})/(m+n)$	(2•3588.0 + 44.94•2•141.1)/(35.95 + 44.94)	245.5 kN	
$F_{T,Rd}=\min(F_{T,Rd}$ mode1,2,3)	min(467.5, 245.5, 282.2)	245.5 kN	

Beam Web Tension row 1 only

$F_{t,wb,Rd}=l_{eff,1} \cdot t_{wb} \cdot f_{y,wb}/\gamma_{M0}$	225.9•8.5•275/1.00	528.0 kN	
Potential resistance of Bolt Row 1	$F_{t1,Rd}$	245.5 kN	Mode 2

BOLT ROW 2

End-Plate rows 1 to 2 combined

l_{eff},cp(Row 1)=PI•m	PI•35.95	112.9 mm	
l_{eff},nc(Row 1)=α•m-(2m+0.625e)	6.45•35.95-(2•35.95+0.625•57.50)	124.1 mm	
l_{eff},cp(Row 2)=PI•m	PI•35.95	112.9 mm	
l_{eff},nc(Row 2)=2m+0.625e	2•35.95+0.625•57.50	107.8 mm	
$l_{eff,cp}=l_{eff,cp(R1)}+2P+l_{eff,cp(R2)}$	112.9 + 2•90.0 + 112.9	405.9 mm	
$l_{eff,ncp}=l_{eff,ncp(R1)}+P+l_{eff,ncp(R2)}$	124.1 + 90.0 + 107.8	322.0 mm	
$l_{eff,1}=\min(l_{eff,cp}, l_{eff,ncp})$	Min(405.9, 322.0)	322.0 mm	
$l_{eff,2}=l_{eff,ncp}$	322.0	322.0 mm	
$M_{pl,1}=l_{eff,1} \cdot t_f^2 \cdot p_y/4/\gamma_{M0}$	322.0•15.0•15.0•275.0/4/1.0	4980.2 kN.mm	
$M_{pl,2}=l_{eff,2} \cdot t_f^2 \cdot p_y/4/\gamma_{M0}$	322.0•15.0•15.0•275.0/4/1.0	4980.2 kN.mm	
$2 \cdot m \cdot n - e_w \cdot (m+n)$	2•35.95•44.94-8.25•(35.95+44.94)	2563.7	
$F_{T,1,Rd}=(8 \cdot n-2 \cdot e_w) \cdot M_{pl,1}/2563.7$	(8•44.94-2•8.25)•4980.2/2563.7	666.3 kN	
$F_{T,2,Rd}=(2 \cdot M_{pl,2}+n \cdot Nb \cdot F_{t,Rd})/(m+n)$	(2•4980.2 + 44.94•4•141.1)/(35.95 + 44.94)	436.7 kN	
$F_{T,Rd}=\min(F_{T,Rd}$ mode1,2,3)	min(666.3, 436.7, 564.5)	436.7 kN	
$F_{t2,Rd}=F_{T,Rd}-F_{t,Rd}1,1$	436.7 - 245.5	191.2 kN	

BOLT ROW 3

End-Plate rows 1 to 3 combined

l_{eff},cp(Row 1)=PI•m	PI•35.95	112.9 mm	
l_{eff},nc(Row 1)=α•m-(2m+0.625e)	6.45•35.95-(2•35.95+0.625•57.50)	124.1 mm	
l_{eff},cp(Row 3)=PI•m	PI•35.95	112.9 mm	
l_{eff},nc(Row 3)=α•m-(2m+0.625e)	8.00•35.95-(2•35.95+0.625•57.50)	179.8 mm	
$l_{eff,cp}=l_{eff,cp(R1)}+2P+l_{eff,cp(R3)}$	112.9 + 2•180.0 + 112.9	585.9 mm	
$l_{eff,ncp}=l_{eff,ncp(R1)}+P+l_{eff,ncp(R3)}$	124.1 + 180.0 + 179.8	483.9 mm	
$l_{eff,1}=\min(l_{eff,cp}, l_{eff,ncp})$	Min(585.9, 483.9)	483.9 mm	
$l_{eff,2}=l_{eff,ncp}$	483.9	483.9 mm	
$M_{pl,1}=l_{eff,1} \cdot t_f^2 \cdot p_y/4/\gamma_{M0}$	483.9•15.0•15.0•275.0/4/1.0	7485.0 kN.mm	
$M_{pl,2}=l_{eff,2} \cdot t_f^2 \cdot p_y/4/\gamma_{M0}$	483.9•15.0•15.0•275.0/4/1.0	7485.0 kN.mm	
$2 \cdot m \cdot n - e_w \cdot (m+n)$	2•35.95•44.94-8.25•(35.95+44.94)	2563.7	
$F_{T,1,Rd}=(8 \cdot n-2 \cdot e_w) \cdot M_{pl,1}/2563.7$	(8•44.94-2•8.25)•7485.0/2563.7	1001.4 kN	
$F_{T,2,Rd}=(2 \cdot M_{pl,2}+n \cdot Nb \cdot F_{t,Rd})/(m+n)$	(2•7485.0 + 44.94•6•141.1)/(35.95 + 44.94)	655.5 kN	
$F_{T,Rd}=\min(F_{T,Rd}$ mode1,2,3)	min(1001.4, 655.5, 846.7)	655.5 kN	
$F_{t3,Rd}=F_{T,Rd}-F_{t,Rd}2,1$	655.5 - 436.7	218.7 kN	

BOLT ROW 4

End Plate row 4 only

$M_{pl,1}=l_{eff,1} \cdot t_f^2 \cdot p_y/4/\gamma_{M0}$	225.9•15.0•15.0•275.0/4/1.0	3494.1 kN.mm	
$M_{pl,2}=l_{eff,2} \cdot t_f^2 \cdot p_y/4/\gamma_{M0}$	287.6•15.0•15.0•275.0/4/1.0	4448.8 kN.mm	
$2 \cdot m \cdot n - e_w \cdot (m+n)$	2•35.95•44.94-8.25•(35.95+44.94)	2563.7	
$F_{T,1,Rd}=(8 \cdot n-2 \cdot e_w) \cdot M_{pl,1}/2563.7$	(8•44.94-2•8.25)•3494.1/2563.7	467.5 kN	
$F_{T,2,Rd}=(2 \cdot M_{pl,2}+n \cdot Nb \cdot F_{t,Rd})/(m+n)$	(2•4448.8 + 44.94•2•141.1)/(35.95 + 44.94)	266.8 kN	

MasterSeries Sales Team
10002
3 Castle Street
Carrickfergus
Co. Antrim BT38 7BE
Tel : 028 9036 5950

Job Ref : 1472
Sheet : C / 671
Made by : Tommy White
Date : 04 August 2017 / Ver. 2017.08
Checked :
Approved :

$F_{T,Rd}$ =min($F_{T,Rd}$ mode1,2,3)	min(467.5, 266.8, 282.2)	266.8 kN	

Step 1C Plastic distribution Limit

T_p< d/1.9•√(f_{ub}/f_{yp})	15.0 < 20/1.9•√(800.0/275)	15.0 <= 18.0	Plastic
$F_{t\ 1,Rd}$ < 1.9 $F_{t,rd}$	245.5 < 1.9•141.1		Plastic
Classification	Plastic Deformation occurs.	Use Plastic distribution	

Potential Tension Capacity

Sigma $F_{ti,Rd}$	245.5 + 191.2 + 218.7 + 266.8 kN	922.3 kN	

Step 2: Compression Zone

Beam Compression

Beam Compression Zone	Flange and Web in Compression Utilising 20% OverStressing		
Total Area Flange and Web	189.9•12.7 + 8.5•179.0	39.3 cm²	
$F_{c,fb,Rd}$	39.3•275•1.20	1298.0 kN	

Potential Compression Capacity

$F_{c,Rd}$min	1298.0	1298.0 kN	OK

Step 4: Moment Capacity

$F_{c,Rd}$ =$F_{c,fc,Rd}$		1298.0 kN	
$F_{t,Rd}$ Total > $F_{c,Rd}$ -N_{Ed}	Reduction in bolt forces is required		
F_{ri}=$F_{c,Rd}$ -N_{Ed}	1298.0 - 376.6	921.4 kN	
Fδ=$F_{t,Rd}$ -F_{ri}	922.3 - 921.4	0.9 kN	

Final Bolt Forces and Moment Capacities

Bolt row 4: M_{c4} =($F_{t4,Rd}$ -Fδ)• h_4	266.8 - 0.9 = 265.9•139.6	37.1 kN.m	
Bolt row 3 $M_{c,Rd}3$ =$F_{t3,Rd}$ •h_3	218.7•649.6	142.1 kN.m	
Bolt row 2 $M_{c,Rd}2$ =$F_{t2,Rd}$ •h_2	191.2•739.6	141.4 kN.m	
Bolt row 1 $M_{c,Rd}1$ =$F_{t1,Rd}$ •h_1	245.5•829.6	203.7 kN.m	
$M_{c,Rd}$		524.4 kN.m	
$M_{mod,Ed}$ =M-N_{Ed}•h_n	150.0 - 376.6•221.4	66.6 kN.m	OK
Tension Bolts	Only the first 1 rows are required to resist the applied moment The remaining rows shall be considered to be part of the shear zone.		
$M_{c,Rd}$' for 1 rows	203.7	203.7 kN.m	
$F_{ri,Ed}$ for 1 rows	245.5	245.5 kN	
$F_{ri,Ed}$ design=$F_{ri,Ed}$ •$M_{Ed}/M_{c,Rd}$'	245.5•66.6/203.7	80.3 kN	

Final Web Compression Zone Height

	Reducing Compression zone for applied moments.		
F red=$F_{c,beam}$-$F_{ri,Ed}$ design	1298.0 - 80.3	1217.7 kN	
h red=F red/t/p_y/1.2	1217.7/8.5/275/1.2	434.1 mm	
h=max(0, h old-h red)	max(0,179.0 - 434.1)	0.0 mm	OK

Step 5: Shear Bolts

$F_{v,Rd}$=α_v•f_{ub}•A / γ_{M2}	0.6 • 800 • 245.0 / 1.25	94.1 kN	
Bearing $F_{b,Rd,End}$-End Plate, End	e1=80, e2=58, k_1=2.5, α_b=1.00, d=20, t=15, f_u=410	246.0 kN	
Bearing $F_{b,Rd}$-End Plate, Inner	p1=90, e2=58, k_1=2.5, α_b=1.00, d=20, t=15, f_u=410	246.0 kN	
$F_{v,Rd,Sh}$=Min(bearing, shear)	Min(246.0, 94.1)	94.1 kN	
$F_{v,Rd,T}$=min($F_{b,Rd}$,0.28•shr)	Min(246.0, 26.3)	26.3 kN	
$F_{v,Rd,TEnd}$=min($F_{b,Rd,End}$,0.28•shr)	Min(246.0, 26.3)	26.3 kN	
Shear=Ns•$F_{v,Rd,Sh}$	8•94.1	752.6 kN	
Tension= (Nt-1)•$F_{v,Rd,T}$+ $F_{v,Rd,TEnd}$	0•26.3 + 2•26.3	52.7 kN	
$F_{v,Rd}$ Total=Shear+Tension	752.6 + 52.7	805 kN	OK

Steps 7&8: Welds

Beam $f_{vw,d}$=f_u/ (√3•$ß_w$) / γ_{M2}	410.0 / √3 / 0.85 / 1.25	222.8 N/mm²	

Flange Tension Weld

Ft,,$_{flng}$ =min(B•T•P_y, F_{r1})	Min(189.9•12.7•275, 80.3)	80.3 kN	
$F_{vw,Rd}$ =2•K•0.7•t_s•L•$f_{vw,d}$	2•1.225•0.7•8•(189.9 - 2•0.7•8)•223	551.3 kN	OK

Flange Compression Weld

	Direct Bearing assumed. No check required		

Web Welds in Tension Zone

Lwt=L-proj-T-root+1.73•g/2	80 - 20 - 12.9 - 10.2 + 1.73 90/2	114.8 mm	
Load per row			
Row_1=K_1•F_{r1}	(41/(36 + 41))•246	130.5 kN	
Total Load F_t	130.5	130.5 kN	
F_{wCap}=2•K•0.7•ts•Lwt•$f_{vw,d}$	2•1.225•0.7•6•114.8•223	265.7 kN	OK

Web Welds in Shear Zone

Lws=D-(T_t+T_b)-r_t-r_b-Lwt	900.0 - 25.9 - 10.2 - 10.2 - 115	739.0 mm	
F_{wCap}=2•0.7•ts•Lws•$f_{vw,d}$	2•0.7•6•739.0•223	1396.7 kN	OK

MasterSeries Sales Team
10002
3 Castle Street
Carrickfergus
Co. Antrim BT38 7BE
Tel : 028 9036 5950

Job Ref : **1472**
Sheet : **C / 672**
Made by : **Tommy White**
Date : **04 August 2017 / Ver. 2017.08**
Checked :
Approved :

Haunch Welds

M_h= min($Mapp_{eaves}$,Mc_{rafter})	min(150.0, 404.5)	-150.0 kN.m	
F_h,Ed=min(M_h/(h_c-t_{fb}), b_b•t_{fb}•f_y)	Min(-150.0/(453.4 - 12.7), 189.9•12.7•275)	340.4 kN	
Haunch/Beam Flange area ratio, α	189.9•12.7/(189.9•12.7 + 189.9•12.7)	0.50	
F_{hnch}=F_h•min(0.5, α)	340.4•min(0.5, 0.50)	170.2 kN	
Fh_{ten}=(Fr1+Fr2+Fr3)/Cos(θ)	(245.5 + 191.2 + 218.7) / Cos(-12.0)	670.1 kN	

Haunch End Weld

t=min(S_{hw}, t_f) •Cos((90-ThetaH1)/2)	min(8, 12.7)•Cos((90-20.9)/2)	6.6 mm	
K=√(3/(1+2•Cos((90-ThetaH1)/2)^2))	√(3/(1+2•Cos((90-20.9)/2)^2)	1.13	
End_{Cap}=K•t(B-2•w)•$f_{vw,d}$	1.128•6.6•(189.9 - 2•0.7•8)•223	295.7 kN	
End_{Cap}>= F_{hnch}	295.7 >= 170.2	170.2 kN	OK

Haunch Web Weld

Web force F_{wh}=Fh_{ten}-F_{hnch}	670.1 - 170.2	499.9 kN	
L_w =(H_l-D_c/2-T_{ep})/Cos(Theta)	(1200 - 0.0/2 - 15)/Cos(-12.0)	1211.5 mm	
L_w=L_w -t_w-(T+t_{w1})/Sin(Theta1)	1211.5 - 6 -(12.7 + 6)/Sin(20.9)= 1211.5-6-52.5	1152.9 mm	
Web_{Cap}=2•0.7•t(L_w-2•t)•$f_{vw,d}$	2•0.7•6(1152.9 - 2•0.7•6)•223	2141.8 kN	
Web_{Cap}>= F_{wh}	2141.8 >= 499.9	499.9 kN	OK

MasterSeries Sales Team
3 Castle Street
Carrickfergus
Co. Antrim BT38 7BE
Tel : 028 9036 5950

10002

Job Ref : **1472**
Sheet : **C / 674**
Made by : **Tommy White**
Date : **04 August 2017 / Ver. 2017.08**
Checked :
Approved :

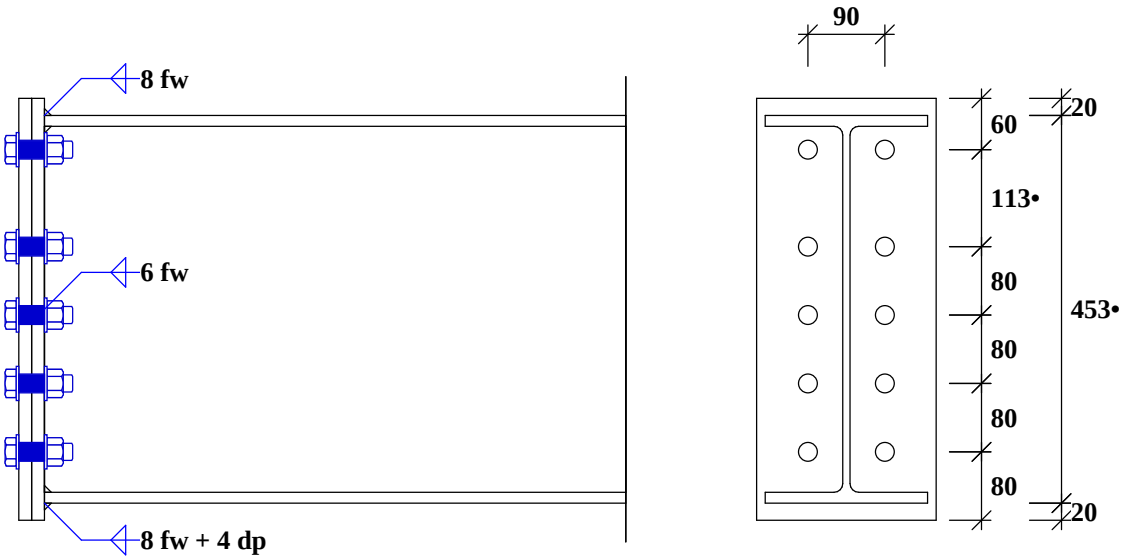

Plates S 275
Beam 457x191 UB 67 [S275]

End-Plate 493 x 210 x 15 mm (12 kg)
10 No. M20 Grade 8.8 Bolts in 22 mm holes

End-Plated Splice
Beam to Beam End-Plated Connection to EC 3 (UK NAD)
Loading Case 001
Basic Data

User Defined Applied Forces at End-plate Interface

Resultant Forces M, Fv, F	-235.0 kNm, 400.0 kN, 300.0 kN		
Load directions	Bottom of Joint in Tension, Rafter moving Down and in Compression.		
Design to	EC 3: Part 1-8: 2005 Design of Joints		
	SCI Green Book		
	P398: Joints in steel construction: Moment-Resisting Joints to Eurocode 3		
Weld Grades	All weld grades provided to suit minimum connected steel grade		

Basic Dimensions

Beam-457x191UB67 [28]	D=453.4, B=189.9, T=12.7, t=8.5, r=10.2, py=275		
Bolts 20 mm Ø in 22 mm holes	Grade 8.8 Bolts		
Plates S 275	All weld grades provided to suit minimum connected steel grade		
Rafter Capacities Mc, Fvc, Fc	404.5 kN.m, 649.9 kN, 2351.3 kN	Fvc = 649.9 kN	OK

Summary of Results (Unity Ratios)

Moment Capacity 191.5 kNm (for 4 rows of bolts) (Modified Applied Mom. M_{mod}=168.9 kNm)		0.88	OK
Moment Capacity 191.5 kNm (for the 3 rows of bolts required in the tension zone)		0.88	OK
Shear Capacity		0.75	OK
Flange Welds	0.46	0.46	OK
Web Welds	0.77, 0.77, 0.68	0.77	OK

Step 1: Tension Zone

Basics

Bm/Plt b_p, W, t_{wb}, S_w, m_p, e_p, n_p	210.0, 90, 8.5, 6, 36.0, 60.0, 44.9	
$F_{t,Rd}=k_2 \cdot f_{ub} \cdot A / \gamma_{m2}$	0.90•800•245/1.25	141.1 kN
$F_{T,3,Rd}=\sum F_{t,Rd}$	2•141.1	282.2 kN

BOLT ROW 1
End Plate row 1 only

MasterSeries Sales Team
3 Castle Street
Carrickfergus
Co. Antrim BT38 7BE
Tel : 028 9036 5950

10002

Job Ref : **1472**
Sheet : **C / 675**
Made by : **Tommy White**
Date : **04 August 2017 / Ver. 2017.08**
Checked :
Approved :

m, e, mx, α	36.0, 60.0, 40.9, 6.6		
l_{eff} modes	$l_{eff,cp}$ = 225.9, $l_{eff,ncp}$ = 235.7		T2.2 (c)
Mode 1 $l_{eff,1}=\min(l_{eff,cp}, l_{eff,cnp})$	min(225.9, 235.7)	225.9 mm	
Mode 2 $l_{eff,2}=l_{eff,ncp}$	235.7	235.7 mm	
$M_{pl,1} = l_{eff,1} \cdot t_f^2 \cdot p_y/4/\gamma_{M0}$	225.9•15.0•15.0•275.0/4/1.0	3494.1 kN.mm	
$M_{pl,2} = l_{eff,2} \cdot t_f^2 \cdot p_y/4/\gamma_{M0}$	235.7•15.0•15.0•275.0/4/1.0	3645.8 kN.mm	
$2 \cdot m \cdot n - e_w \cdot (m+n)$	2•35.95•44.94-8.25•(35.95+44.94)	2563.7	
$F_{T,1,Rd}=(8 \cdot n-2 \cdot e_w) \cdot M_{pl,1}$ /2563.7	(8•44.94-2•8.25)•3494.1/2563.7	467.5 kN	
$F_{T,2,Rd}=(2 \cdot M_{pl,2} + n \cdot Nb \cdot F_{t,Rd})/(m+n)$	(2•3645.8 + 44.94•2•141.1)/(35.95 + 44.94)	246.9 kN	
$F_{T,Rd} = \min(F_{T,Rd}$ mode1,2,3)	min(467.5, 246.9, 282.2)	246.9 kN	

Beam Web Tension row 1 only

$F_{t,wb,Rd} = l_{eff,1} \cdot t_{wb} \cdot f_{y,wb}/\gamma_{M0}$	225.9•8.5•275/1.00	528.0 kN	
Potential resistance of Bolt Row 1	$F_{t1,Rd}$	246.9 kN	Mode 2

BOLT ROW 2

End Plate row 2 only

m, e	36.0, 60.0		
l_{eff} modes	$l_{eff,cp}$ = 225.9, $l_{eff,ncp}$ = 218.8		T2.2 (e)
Mode 1 $l_{eff,1}=\min(l_{eff,cp}, l_{eff,cnp})$	min(225.9, 218.8)	218.8 mm	
Mode 2 $l_{eff,2}=l_{eff,ncp}$	218.8	218.8 mm	
$M_{pl,1} = l_{eff,1} \cdot t_f^2 \cdot p_y/4/\gamma_{M0}$	218.8•15.0•15.0•275.0/4/1.0	3384.6 kN.mm	
$M_{pl,2} = l_{eff,2} \cdot t_f^2 \cdot p_y/4/\gamma_{M0}$	218.8•15.0•15.0•275.0/4/1.0	3384.6 kN.mm	
$2 \cdot m \cdot n - e_w \cdot (m+n)$	2•35.95•44.94-8.25•(35.95+44.94)	2563.7	
$F_{T,1,Rd}=(8 \cdot n-2 \cdot e_w) \cdot M_{pl,1}$ /2563.7	(8•44.94-2•8.25)•3384.6/2563.7	452.8 kN	
$F_{T,2,Rd}=(2 \cdot M_{pl,2} + n \cdot Nb \cdot F_{t,Rd})/(m+n)$	(2•3384.6 + 44.94•2•141.1)/(35.95 + 44.94)	240.5 kN	
$F_{T,Rd} = \min(F_{T,Rd}$ mode1,2,3)	min(452.8, 240.5, 282.2)	240.5 kN	

Beam Web Tension row 2 only

$F_{t,wb,Rd} = l_{eff,1} \cdot t_{wb} \cdot f_{y,wb}/\gamma_{M0}$	218.8•8.5•275/1.00	511.4 kN	

End-Plate rows 1 to 2 combined

l_{eff},cp(Row 1)=PI•m	PI•35.95	112.9 mm	
l_{eff},nc(Row 1)=α•m-(2m+0.625e)	6.56•35.95-(2•35.95+0.625•60.00)	126.3 mm	
l_{eff},cp(Row 2)=PI•m	PI•35.95	112.9 mm	
l_{eff},nc(Row 2)=2m+0.625e	2•35.95+0.625•60.00	109.4 mm	
$l_{eff,cp}=l_{eff,cp(R1)}+2P+l_{eff,cp(R2)}$	112.9 + 2•80.0 + 112.9	385.9 mm	
$l_{eff,ncp}=l_{eff,ncp(R1)}+P+l_{eff,ncp(R2)}$	126.3 + 80.0 + 109.4	315.7 mm	
$l_{eff,1}=\min(l_{eff,cp}, l_{eff,ncp})$	Min(385.9, 315.7)	315.7 mm	
$l_{eff,2}=l_{eff,ncp}$	315.7	315.7 mm	
$M_{pl,1} = l_{eff,1} \cdot t_f^2 \cdot p_y/4/\gamma_{M0}$	315.7•15.0•15.0•275.0/4/1.0	4883.3 kN.mm	
$M_{pl,2} = l_{eff,2} \cdot t_f^2 \cdot p_y/4/\gamma_{M0}$	315.7•15.0•15.0•275.0/4/1.0	4883.3 kN.mm	
$2 \cdot m \cdot n - e_w \cdot (m+n)$	2•35.95•44.94-8.25•(35.95+44.94)	2563.7	
$F_{T,1,Rd}=(8 \cdot n-2 \cdot e_w) \cdot M_{pl,1}$ /2563.7	(8•44.94-2•8.25)•4883.3/2563.7	653.4 kN	
$F_{T,2,Rd}=(2 \cdot M_{pl,2} + n \cdot Nb \cdot F_{t,Rd})/(m+n)$	(2•4883.3 + 44.94•4•141.1)/(35.95 + 44.94)	434.3 kN	
$F_{T,Rd} = \min(F_{T,Rd}$ mode1,2,3)	min(653.4, 434.3, 564.5)	434.3 kN	
$F_{t2,Rd}=F_{T,Rd}-F_{t,Rd}$1,1	434.3 - 246.9	187.4 kN	

Beam Web Tension rows 1 to 2 combined

$F_{t,wb,Rd} = l_{eff,1} \cdot t_{wb} \cdot f_{y,wb}/\gamma_{M0}$	315.7•8.5•275/1.00	737.9 kN	
$F_{t2,Rd}=F_{T,Rd}-F_{t,Rd}$1,1	737.9 - 246.9	491.0 kN	
Potential resistance of Bolt Row 2	$F_{t2,Rd}$	187.4 kN	Mode 2

BOLT ROW 3

End Plate row 3 only

m, e	36.0, 60.0		
l_{eff} modes	$l_{eff,cp}$ = 225.9, $l_{eff,ncp}$ = 218.8		T2.2 (e)
Mode 1 $l_{eff,1}=\min(l_{eff,cp}, l_{eff,cnp})$	min(225.9, 218.8)	218.8 mm	
Mode 2 $l_{eff,2}=l_{eff,ncp}$	218.8	218.8 mm	
$M_{pl,1} = l_{eff,1} \cdot t_f^2 \cdot p_y/4/\gamma_{M0}$	218.8•15.0•15.0•275.0/4/1.0	3384.6 kN.mm	
$M_{pl,2} = l_{eff,2} \cdot t_f^2 \cdot p_y/4/\gamma_{M0}$	218.8•15.0•15.0•275.0/4/1.0	3384.6 kN.mm	
$2 \cdot m \cdot n - e_w \cdot (m+n)$	2•35.95•44.94-8.25•(35.95+44.94)	2563.7	
$F_{T,1,Rd}=(8 \cdot n-2 \cdot e_w) \cdot M_{pl,1}$ /2563.7	(8•44.94-2•8.25)•3384.6/2563.7	452.8 kN	
$F_{T,2,Rd}=(2 \cdot M_{pl,2} + n \cdot Nb \cdot F_{t,Rd})/(m+n)$	(2•3384.6 + 44.94•2•141.1)/(35.95 + 44.94)	240.5 kN	
$F_{T,Rd} = \min(F_{T,Rd}$ mode1,2,3)	min(452.8, 240.5, 282.2)	240.5 kN	

Beam Web Tension row 3 only

$F_{t,wb,Rd} = l_{eff,1} \cdot t_{wb} \cdot f_{y,wb}/\gamma_{M0}$	218.8•8.5•275/1.00	511.4 kN	

End-Plate rows 2 to 3 combined

l_{eff},cp(Row 2)=PI•m	PI•35.95	112.9 mm	
l_{eff},nc(Row 2)=2m+0.625e	2•35.95+0.625•60.00	109.4 mm	
l_{eff},cp(Row 3)=PI•m	PI•35.95	112.9 mm	

MasterSeries Sales Team
10002
3 Castle Street
Carrickfergus
Co. Antrim BT38 7BE
Tel : 028 9036 5950

Job Ref : **1472**
Sheet : **C / 676**
Made by : **Tommy White**
Date : **04 August 2017 / Ver. 2017.08**
Checked :
Approved :

l_{eff},nc(Row 3)=2m+0.625e	2•35.95+0.625•60.00	109.4 mm	
$l_{eff,cp}=l_{eff,cp(R2)}+2P+l_{eff,cp(R3)}$	112.9 + 2•80.0 + 112.9	385.9 mm	
$l_{eff,ncp}=l_{eff,ncp(R2)}+P+l_{eff,ncp(R3)}$	109.4 + 80.0 + 109.4	298.8 mm	
$l_{eff,1}=\min(l_{eff,cp}, l_{eff,ncp})$	Min(385.9, 298.8)	298.8 mm	
$l_{eff,2}=l_{eff,ncp}$	298.8	298.8 mm	
$M_{pl,1} = l_{eff,1} \cdot t_f^2 \cdot p_y/4/\gamma_{M0}$	298.8•15.0•15.0•275.0/4/1.0	4622.1 kN.mm	
$M_{pl,2} = l_{eff,2} \cdot t_f^2 \cdot p_y/4/\gamma_{M0}$	298.8•15.0•15.0•275.0/4/1.0	4622.1 kN.mm	
2•m•n-e_w•(m+n)	2•35.95•44.94-8.25•(35.95+44.94)	2563.7	
$F_{T,1,Rd}=(8 \cdot n-2 \cdot e_w) \cdot M_{pl,1}$ /2563.7	(8•44.94-2•8.25)•4622.1/2563.7	618.4 kN	
$F_{T,2,Rd}=(2 \cdot M_{pl,2} + n \cdot Nb \cdot F_{t,Rd})/(m+n)$	(2•4622.1 + 44.94•4•141.1)/(35.95 + 44.94)	427.9 kN	
$F_{T,Rd} = \min(F_{T,Rd}$ mode1,2,3)	min(618.4, 427.9, 564.5)	427.9 kN	
$F_{t3,Rd}=F_{T,Rd}-F_{t,Rd}$2,2	427.9 - 187.4	240.5 kN	

Beam Web Tension rows 2 to 3 combined

$F_{t,wb,Rd} = l_{eff,1} \cdot t_{wb} \cdot f_{y,wb}/\gamma_{M0}$	298.8•8.5•275/1.00	698.4 kN	
$F_{t3,Rd}=F_{T,Rd}-F_{t,Rd}$2,2	698.4 - 187.4	511.0 kN	

End-Plate rows 1 to 3 combined

l_{eff},cp(Row 1)=PI•m	PI•35.95	112.9 mm	
l_{eff},nc(Row 1)=α•m-(2m+0.625e)	6.56•35.95-(2•35.95+0.625•60.00)	126.3 mm	
l_{eff},cp(Row 3)=PI•m	PI•35.95	112.9 mm	
l_{eff},nc(Row 3)=2m+0.625e	2•35.95+0.625•60.00	109.4 mm	
$l_{eff,cp}=l_{eff,cp(R1)}+2P+l_{eff,cp(R3)}$	112.9 + 2•160.0 + 112.9	545.9 mm	
$l_{eff,ncp}=l_{eff,ncp(R1)}+P+l_{eff,ncp(R3)}$	126.3 + 160.0 + 109.4	395.7 mm	
$l_{eff,1}=\min(l_{eff,cp}, l_{eff,ncp})$	Min(545.9, 395.7)	395.7 mm	
$l_{eff,2}=l_{eff,ncp}$	395.7	395.7 mm	
$M_{pl,1} = l_{eff,1} \cdot t_f^2 \cdot p_y/4/\gamma_{M0}$	395.7•15.0•15.0•275.0/4/1.0	6120.8 kN.mm	
$M_{pl,2} = l_{eff,2} \cdot t_f^2 \cdot p_y/4/\gamma_{M0}$	395.7•15.0•15.0•275.0/4/1.0	6120.8 kN.mm	
2•m•n-e_w•(m+n)	2•35.95•44.94-8.25•(35.95+44.94)	2563.7	
$F_{T,1,Rd}=(8 \cdot n-2 \cdot e_w) \cdot M_{pl,1}$ /2563.7	(8•44.94-2•8.25)•6120.8/2563.7	818.9 kN	
$F_{T,2,Rd}=(2 \cdot M_{pl,2} + n \cdot Nb \cdot F_{t,Rd})/(m+n)$	(2•6120.8 + 44.94•6•141.1)/(35.95 + 44.94)	621.7 kN	
$F_{T,Rd} = \min(F_{T,Rd}$ mode1,2,3)	min(818.9, 621.7, 846.7)	621.7 kN	
$F_{t3,Rd}=F_{T,Rd}-F_{t,Rd}$2,1	621.7 - 434.3	187.4 kN	

Beam Web Tension rows 1 to 3 combined

$F_{t,wb,Rd} = l_{eff,1} \cdot t_{wb} \cdot f_{y,wb}/\gamma_{M0}$	395.7•8.5•275/1.00	924.9 kN	
$F_{t3,Rd}=F_{T,Rd}-F_{t,Rd}$2,1	924.9 - 434.3	490.6 kN	
Potential resistance of Bolt Row 3	$F_{t3,Rd}$	187.4 kN	Mode 2

BOLT ROW 4

End-Plate rows 1 to 4 combined

l_{eff},cp(Row 1)=PI•m	PI•35.95	112.9 mm	
l_{eff},nc(Row 1)=α•m-(2m+0.625e)	6.56•35.95-(2•35.95+0.625•60.00)	126.3 mm	
l_{eff},cp(Row 4)=PI•m	PI•35.95	112.9 mm	
l_{eff},nc(Row 4)=2m+0.625e	2•35.95+0.625•60.00	109.4 mm	
$l_{eff,cp}=l_{eff,cp(R1)}+2P+l_{eff,cp(R4)}$	112.9 + 2•240.0 + 112.9	705.9 mm	
$l_{eff,ncp}=l_{eff,ncp(R1)}+P+l_{eff,ncp(R4)}$	126.3 + 240.0 + 109.4	475.7 mm	
$l_{eff,1}=\min(l_{eff,cp}, l_{eff,ncp})$	Min(705.9, 475.7)	475.7 mm	
$l_{eff,2}=l_{eff,ncp}$	475.7	475.7 mm	
$M_{pl,1} = l_{eff,1} \cdot t_f^2 \cdot p_y/4/\gamma_{M0}$	475.7•15.0•15.0•275.0/4/1.0	7358.3 kN.mm	
$M_{pl,2} = l_{eff,2} \cdot t_f^2 \cdot p_y/4/\gamma_{M0}$	475.7•15.0•15.0•275.0/4/1.0	7358.3 kN.mm	
2•m•n-e_w•(m+n)	2•35.95•44.94-8.25•(35.95+44.94)	2563.7	
$F_{T,1,Rd}=(8 \cdot n-2 \cdot e_w) \cdot M_{pl,1}$ /2563.7	(8•44.94-2•8.25)•7358.3/2563.7	984.5 kN	
$F_{T,2,Rd}=(2 \cdot M_{pl,2} + n \cdot Nb \cdot F_{t,Rd})/(m+n)$	(2•7358.3 + 44.94•8•141.1)/(35.95 + 44.94)	809.1 kN	
$F_{T,Rd} = \min(F_{T,Rd}$ mode1,2,3)	min(984.5, 809.1, 1129.0)	809.1 kN	
$F_{t4,Rd}=F_{T,Rd}-F_{t,Rd}$3,1	809.1 - 621.7	187.4 kN	

Step 1C Plastic distribution Limit

$T_p < d/1.9 \cdot \sqrt{(f_{ub}/f_{yp})}$	15.0 < 20/1.9•√(800.0/275)	15.0 <= 18.0	Plastic
$F_{t\,1,Rd} < 1.9\ F_{t,rd}$	246.9 < 1.9•141.1		Plastic
Classification	Plastic Deformation occurs.	Use Plastic distribution	

Potential Tension Capacity

Sigma $F_{ti,Rd}$	246.9 + 187.4 + 187.4 + 187.4 kN	809.1 kN

MasterSeries Sales Team
10002
3 Castle Street
Carrickfergus
Co. Antrim BT38 7BE
Tel : 028 9036 5950

Job Ref : 1472
Sheet : C / 677
Made by : Tommy White
Date : 04 August 2017 / Ver. 2017.08
Checked :
Approved :

Step 2: Compression Zone

Beam Compression

$F_{c,fb,Rd}= M_{c,Rd}/(h_b-t_{fb})$	398.1•1000/(440.70)	903.4 kN	

Potential Compression Capacity

$F_{c,Rd}$min	903.4	903.4 kN	OK

Step 4: Moment Capacity

$F_{c,Rd} =F_{c,fc,Rd}$		903.4 kN	
$F_{t,Rd}$ Total $> F_{c,Rd} -N_{Ed}$	Reduction in bolt forces is required		
$F_{ri}=F_{c,Rd} -N_{Ed}$	903.4 - 300.0	603.4 kN	
$F\delta=F_{t,Rd} -F_{ri}$	809.1 - 603.4	205.8 kN	

Final Bolt Forces and Moment Capacities

Bolt row 4: $M_{c4} =(F_{t4,Rd} -F\delta)\cdot h_4$	187.4 - 205.8 = 0.0•147.1	0.0 kN.m	
Bolt row 3: $M_{c3} =(F_{t3,Rd} -F\delta)\cdot h_3$	187.4 - 18.4 = 169.0•227.1	38.4 kN.m	
Bolt row 2 $M_{c,Rd}2 =F_{t2,Rd} \cdot h_2$	187.4•307.1	57.5 kN.m	
Bolt row 1 $M_{c,Rd}1 =F_{t1,Rd} \cdot h_1$	246.9•387.1	95.6 kN.m	
$M_{c,Rd}$		191.5 kN.m	
$M_{mod,Ed} =M-N_{Ed}\cdot h_n$	235.0 - 300.0•220.4	168.9 kN.m	OK
Tension Bolts	Only the first 3 rows are required to resist the applied moment The remaining rows shall be considered to be part of the shear zone.		
$M_{c,Rd}'$ for 3 rows	95.6, 57.5, 38.4	191.5 kN.m	
$F_{ri,Ed}$ for 3 rows	246.9, 187.4, 169.0	603.4 kN	
$F_{ri,Ed}$ design$=F_{ri,Ed} \cdot M_{Ed}/M_{c,Rd}'$	603.4•168.9/191.5	532.2 kN	

Step 5: Shear Bolts

$F_{v,Rd}=\alpha_v\cdot f_{ub}\cdot A / \gamma_{M2}$	0.6 • 800 • 245.0 / 1.25	94.1 kN	
Bearing $F_{b,Rd,End}$-End Plate, End	e1=60, e2=60, k_1=2.5, α_b=0.91, d=20, t=15, f_u=410	223.6 kN	
Bearing $F_{b,Rd}$-End Plate, Inner	p1=80, e2=60, k_1=2.5, α_b=0.96, d=20, t=15, f_u=410	236.7 kN	
$F_{v,Rd,Sh}$=Min(bearing, shear)	Min(236.7, 94.1)	94.1 kN	
$F_{v,Rd,T}$=min($F_{b,Rd}$,0.28•shr)	Min(236.7, 26.3)	26.3 kN	
$F_{v,Rd,TEnd}$=min($F_{b,Rd,End}$,0.28•shr)	Min(223.6, 26.3)	26.3 kN	
Shear=Ns•$F_{v,Rd,Sh}$	4•94.1	376.3 kN	
Tension= (Nt-1)•$F_{v,Rd,T}$+ $F_{v,Rd,TEnd}$	4•26.3 + 2•26.3	158.1 kN	
$F_{v,Rd}$ Total=Shear+Tension	376.3 + 158.1	534 kN	OK

Step 7: Welds

Beam $f_{vw,d}=f_u/ (\sqrt{3}\cdot ß_w) / \gamma_{M2}$	410.0 / $\sqrt{3}$ / 0.85 / 1.25	222.8 N/mm²	

Flange Tension Weld

$Ft_{,flng} =min(B\cdot T\cdot P_y, F_{r1}+F_{r2})$	Min(189.9•12.7•275, 217.8 + 165.3)	383.1 kN	
$F_{vw,Rd} =2\cdot K\cdot 0.7\cdot t_s\cdot L\cdot f_{vw,d}$	2•1.225•0.7•12•(189.9 - 2•0.7•8)•223	827.0 kN	OK

Flange Compression Weld

Direct Bearing assumed. No check required

Web Welds in Tension Zone

Lwt=L-proj-T-root+1.73•g/2	240 - 20 - 12.7 - 10.2 + 1.73 90/2	275.0 mm	
Load per row			
$Row_1=K_1\cdot F_{r1}$	(41/(36 + 41))•247	131.4 kN	
$Row_2=K_2\cdot F_{r2}$	1•187	187.4 kN	
$Row_3=K_3\cdot F_{r3}$	1•187	169.0 kN	
Total Load F_t	131.4, 187.4, 169.0	487.9 kN	
$F_{wCap}=2\cdot K\cdot 0.7\cdot ts\cdot Lwt\cdot f_{vw,d}$	2•1.225•0.7•6•275.0•223	636.6 kN	OK

Web Welds in Shear Zone

Lws=D-(T_t+T_b)-r_t-r_b-Lwt	453.4 - 25.4 - 10.2 - 10.2 - 275	132.7 mm	
$F_{wCap}=2\cdot 0.7\cdot ts\cdot Lws\cdot f_{vw,d}$	2•0.7•6•132.7•223	250.7 kN	
Require More Shear Capacity	Determining Residual Shear Capacity of Tension Zone Weld.		
Load per row			
$Row_1=K_1\cdot F_{r1}$	(41/(36 + 41))•247	131.4 kN	
$Row_2=K_2\cdot F_{r2}$	1•187	187.4 kN	
$Row_3=K_3\cdot F_{r3}$	1•187	169.0 kN	
Total Load F_t	131.4, 187.4, 169.0	487.9 kN	
$F_{wCap}=2\cdot K\cdot 0.7\cdot ts\cdot Lwt\cdot f_{vw,d}$	2•1.225•0.7•6•275.0•223	636.6 kN	OK
Tension Utilisation	487.9/636.6	0.77	
Shear Utilisation Available V_{ut}	$\sqrt{(1 - 0.77^2)}$	0.64	
Residual $V_t=f_{vw,d}(V_{ut}\cdot 2\cdot 0.7\cdot t_w)\cdot L_{wt}$	223(0.64•2•0.7•6)•275	333.88 kN	
Total Shear Capacity=V_t+V	333.88 + 250.73	584.6 kN	OK

MasterSeries Sales Team
3 Castle Street
Carrickfergus
Co. Antrim BT38 7BE
Tel : 028 9036 5950

10002

Job Ref	**: 1472**
Sheet	**: C / 679**
Made by	**: Tommy White**
Date	**: 04 August 2017 / Ver. 2017.08**
Checked	**:**
Approved	**:**

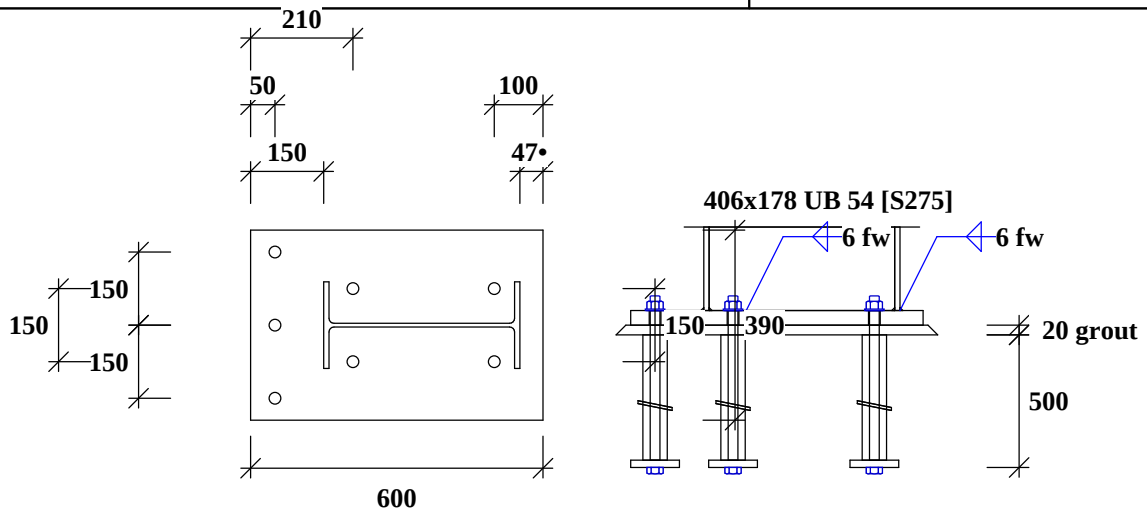

Base-Plate 600 x 390 x 30 mm (55 Washers 100 x 100 x 15 mm thick with 50 mm Void
With 7 No. 24 mm holes All Plates S 275
For 20 mm Grade 8.8 Bolts. Reinforcement 12 @ 200 mm cc each way. Cover 0 mm

Asymetrical Base-Plate
Base-Plate Connection to EC 3 (UK NAD)
Loading Case 001
Basic Data

User Defined Applied Forces at Interface

Resultant Forces M, Fv, F	Moment +125.0 kNm, Shear +500.0 kN, Axial +1300.0 kN (Left side in tension, Axial Compression)		

Basic Dimensions

Column: 406x178UB54 [28]	D=402.6, B=177.7, T=10.9, t=7.7, r=10.2, py=275		
Bolts 20 mm Ø in 24 mm holes	Grade 8.8 Bolts		
Plates S 275	All weld grades provided to suit minimum connected steel grade		
Grout Fck, Conc Fck, fy, slope	20 N/mm², 32 N/mm², 0.35 N/mm², 265 N/mm², 30 deg to vertical		
Design to	EC 3: Part 1-8: 2005 Design of Joints SCI Green Book P398: Joints in steel construction: Moment-Resisting Joints to Eurocode 3		
Column Capacities Mc, Fvc, Fc	290.0 kN.m, 528.3 kN, 1896.1 kN	Fvc = 528.3 kN	OK

Summary of Results (Unity Ratios)

Concrete Pressure		1.00	OK
Base-Plate thickness in Compression		0.96	OK
Horizontal Shear		0.86	OK
Flange & Web Welds	0.72	0.72	OK

Step 2 - Compression T-Stub

Pad Diffusion Ratio α	Using SCI default Value	1.50	
Grout Ratio β_J		0.67	
$F_{cd}=\alpha_{cc}\cdot F_{ck} / \gamma_c$	0.85 • 32.00 / 1.50	18.13 N/mm²	
Bearing Stress $F_{jd}= \beta_J \cdot \alpha \cdot F_{cd}$	0.67 • 1.50 • 18.13	18.13 N/mm²	
Max $c =T_{bp}\cdot\sqrt{(f_{y.bp} / (3\cdot f_{jd}\cdot\gamma_{M0}))}$	$30\cdot\sqrt{(265 / 3\cdot(18.13\cdot1.0))}$	66.2 mm	

Step 1-2: Base-Plate Pressure

Base ecc=M/F	125.0/1300.0	96.2 mm	
Pressure Configuration	Compression Only with Optimised Compression Area		
Proj C, Xcc	63.4, 152.5		
L Zones X1, X2, X3, X4, X5	0.0, 121.7, 254.1, 1.7, 0.0		
W Zones Wstiff, Wflange, Wweb	0.0, 304.4, 134.4		
$Ac=x_f\cdot wf_c+x_w\cdot ww_c+x_f\cdot wf_t$	121.67•304.44 + 254.06•134.44 + 1.65•304.44	717.0 cm²	
Conc Cap $Fc=\cdot F_{jd}\cdot Ac$	18.1•71699.4	1300.1 kN	OK
Pressure=P•1000/Ac	1300.0•1000/71699	18.13 N/mm²	OK
$h_f=h_c-t_{fc}$	402.6 - 10.9	391.7	
$N_{R,T}= M_{Ed}/h_f+F/2$	125.0/391.7 + 1300.0/2	969.1 kN	

MasterSeries Sales Team
10002
3 Castle Street
Carrickfergus
Co. Antrim BT38 7BE
Tel : 028 9036 5950

Job Ref : **1472**
Sheet : **C / 680**
Made by : **Tommy White**
Date : **04 August 2017 / Ver. 2017.08**
Checked :
Approved :

$F_{c,fc,Rd}= M_{c,Rd}/h_f$	221.6•1000/(391.70)	565.8 kN	**Warning**

Step 2a: Plate Compression Bending

e=C	63.4	63.4 mm	
$M_{app}=p•e^2/2$	18.1•63.4²/2	36403 Nmm/mm	
$tp=\sqrt{(6•M_{app}•\gamma_{M0}/p_y)}$	√(6•36403•1.00/265)	28.7 mm	OK

Step 4: Shear

Base Friction

Friction Fr=0.30•Fc	0.30•+1300.0 kN	390.0 kN	

Check 4a: Bolt Shear

$\alpha_{bc}=0.44-0.0003•f_{yb}$	0.44 - 0.0003 • 640	0.248	
$F_{v,Rd}=\alpha_{bc}•f_{ub}•A / \gamma_{M2}$	0.248 • 800 • 245.0 / 1.25	38.9 kN	

Check 4b: Base-Plate Bearing

P_1, e_1, P_2, e_2, α_b, k_1	160.0, 50.0, 300.0, 45.0, 0.694, 2.500		
$F_{b,Rd}=k_1• \alpha_b•f_{up}•d•t_p/ \gamma_{M2}$	2.5 • 0.694 • 410 • 20 • 30.0 / 1.25	341.7 kN	
Conc. Bearing $Cb=3•Ø^2•2•F_{cd,min}$	3•20²•2•11	27.2 kN	
$Pss=Min(F_{Vrd1}, Cb, Pb, Bb)•nbs$	Min(38.9, 27.2, 341.7, 600.0) = 27.2•2	54.4 kN	
$Pts=Min(F_{Vrd1}, Cb, Pb, Bb)•nbt$	Min(38.9, 27.2, 341.7, 600.0) = 27.2•5, (no tension)	136.0 kN	

Total Shear Capacity

Total Cap=Fr+Pss+Pts	390.0 + 54.4 + 136.0	580.4 kN	OK

Step 5: Flange & Web Welds

Load dispersal	Flanges resist Moment and Axial, Web resists Axial and Shear. Direct Bearing therefore design for tensile forces only.		
Areas A, Af, Aw	69.0, 2 x 19.4, 29.3 cm²		

Flange Welds

Fapp=M/la-F•Af/A	125.0/(402.6 - 10.9) - 1300.0•19.4/69.0 No Resultant Tensile Force	-46.1 kN	

Web Welds

Web weld load=Fv/(D-2(fw+T))	500.0/(402.6 - 2(6 +10.9))	1.36 kN/mm	
Weld $f_{vw}.d=f_u / 1.73 / (B_w • \gamma_{M2})$	410/ 1.73 / 0.85 / 1.25	223 N/mm²	
Fcap $w=2•0.7•f_w•f_{vw}.d$	2•0.7•6•223	1.87 kN/mm	OK

MasterSeries Sales Team
3 Castle Street
Carrickfergus
Co. Antrim BT38 7BE
Tel : 028 9036 5950

10002

Job Ref	**: 1472**
Sheet	**: C / 682**
Made by	**: Tommy White**
Date	**: 04 August 2017 / Ver. 2017.08**
Checked	**:**
Approved	**:**

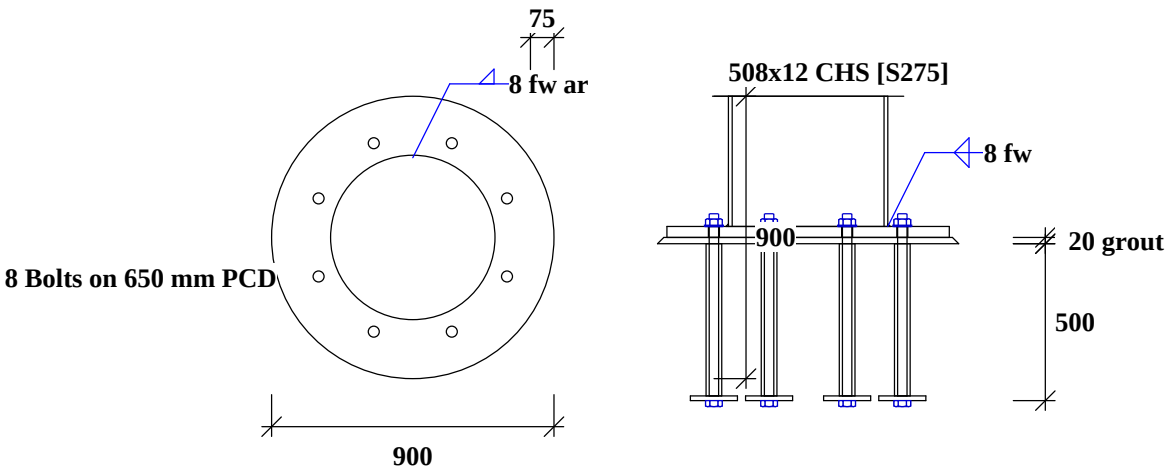

Base-Plate 900 x 900 x 35 mm (223 Washers 150 x 150 x 15 mm thick with 50 mm Void
With 8 No. 35 mm holes All Plates S 275
For 30 mm Grade 8.8 Bolts. Reinforcement 12 @ 200 mm cc each way. Cover 50 mm

Base-Plate CHS
Base-Plate Connection to EC 3 (UK NAD)
Loading Case 001
Basic Data

User Defined Applied Forces at Interface

Resultant Forces M, Fv, F	Moment +225.0 kNm, Shear +470.0 kN, Axial +1605.0 kN (Left side in tension, Axial Compression)

Basic Dimensions

Column: 508x12CHS [28]	Ø=508.0, T=12.0, py=275		
Bolts 30 mm Ø in 35 mm holes	Grade 8.8 Bolts		
Plates S 275	All weld grades provided to suit minimum connected steel grade		
Grout Fck, Conc Fck, fy, slope	12 N/mm², 12 N/mm², 0.35 N/mm², 265 N/mm², 30 deg to vertical		
Design to	EC 3: Part 1-8: 2005 Design of Joints SCI Green Book P398: Joints in steel construction: Moment-Resisting Joints to Eurocode 3		
Column Capacities Mc, Fvc, Fc	812.0 kN.m, 1781.3 kN, 5142.2 kN	Fc = 5142.2 kN	OK

Summary of Results (Unity Ratios)

Concrete Pressure		1.00	OK
Base-Plate thickness in Compression		0.97	OK
Horizontal Shear		0.61	OK
Weld	0.39	0.39	OK

Step 2 - Compression T-Stub

Pad Diffusion Ratio α	Using SCI default Value	1.50
Grout Ratio β_J		0.67
$F_{cd}=\alpha_{cc} \cdot F_{ck} / \gamma_c$	0.85 • 12.00 / 1.50	6.80 N/mm²
Bearing Stress $F_{jd}= \beta_J \cdot \alpha \cdot F_{cd}$	0.67 • 1.50 • 6.80	6.80 N/mm²
Max $c = T_{bp} \cdot \sqrt{(f_{y.bp} / (3 \cdot f_{jd} \cdot \gamma_{M0}))}$	$35 \cdot \sqrt{(265 / 3 \cdot (6.80 \cdot 1.0))}$	126.1 mm

Step 1: Base-Plate Pressure

Pad Diffusion Ratio α	Using SCI default Value	1.50
Grout Ratio β_J		0.67
$F_{cd}=\alpha_{cc} \cdot F_{ck} / \gamma_c$	0.85 • 12.00 / 1.50	6.80 N/mm²
Bearing Stress $F_{jd}= \beta_J \cdot \alpha \cdot F_{cd}$	0.67 • 1.50 • 6.80	6.80 N/mm²
Base ecc=M/F	225.0/1605.0	140.2 mm
Pressure Configuration	Compression Only with Optimised Compression Area	

MasterSeries Sales Team
10002
3 Castle Street
Carrickfergus
Co. Antrim BT38 7BE
Tel : 028 9036 5950

Job Ref : **1472**
Sheet : **C / 683**
Made by : **Tommy White**
Date : **04 August 2017 / Ver. 2017.08**
Checked :
Approved :

Acc=Fn(Proj, Xcc, Xbal)	122.2, 236.0, 209.5	2360.3 cm²	
Conc Cap Fc=•F_{jd}•Ac	6.8•236031.8	1605.0 kN	OK
Pressure=P•1000/Ac	1605.0•1000/236032	6.80 N/mm²	OK

Step 2a: Plate Compression Bending

e=C	122.2	122.2 mm	
M_{app}=p•e²/2	6.8•122.2²/2	50791 Nmm/mm	
tp=√(6•M_{app}•γ_{M0}/p_y)	√(6•50791•1.00/265)	33.9 mm	OK

Step 4: Shear

Base Friction

Friction Fr=0.30•Fc	0.30•+1605.0 kN	481.5 kN	

Check 4a: Bolt Shear

α_{bc}=0.44-0.0003•f_{yb}	0.44 - 0.0003 • 640	0.248	
$F_{v,Rd}$=α_{bc}•f_{ub}•A / γ_{M2}	0.248 • 800 • 561.0 / 1.25	89.0 kN	

Check 4b: Base-Plate Bearing

P_1, e_1, P_2, e_2, α_b, k,	237.8, 125.0, 237.8, 125.0, 1.000, 2.500		
$F_{b,Rd}$=k_1• α_b•f_{up}•d•t_p/ γ_{M2}	2.5 • 1.000 • 410 • 30 • 35.0 / 1.25	861.0 kN	
Conc. Bearing Cb=3•Ø²•2•$F_{cd,min}$	3•30²•2•7	36.7 kN	
Pss=Min(F_{Vrd1}, Cb, Pb, Bb)•nbs	Min(89.0, 36.7, 861.0, 1050.0) = 36.7•8	293.8 kN	

Total Shear Capacity

Total Cap=Fr+Pss	481.5 + 293.8	775.3 kN	OK

Step 5: Weld

Axial Load Fa=F/(pi•D)	1605.0/(3.14•508.0)	1.01 kN/mm	
Moment load Fm=M/(D•D)	225.0/(508.0•508.0)	0.87 kN/mm	
Shear load Fv=V/(pi•D•0.6)	470.0/(3.14•508.0•0.6)	0.49 kN/mm	
	Direct Bearing therefore design for tensile forces only.		
Fapp=Fm-Fa	0.87 - 1.01	0.00 kN/mm	

Shear (Longitudinal)

Weld f_{vw}.d=f_u / 1.73 / (B_w • γ_{M2})	410/ 1.73 / 0.85 / 1.25	223 N/mm²	
Fcap w=1•0.7•f_w•f_{vw}.d	1•0.7•8•223	1.25 kN/mm	OK

MasterSeries Sales Team
3 Castle Street
Carrickfergus
Co. Antrim BT38 7BE
Tel : 028 9036 5950

10002

Job Ref	**: 1472**
Sheet	**: C / 685**
Made by	**: Tommy White**
Date	**: 04 August 2017 / Ver. 2017.08**
Checked	**:**
Approved	**:**

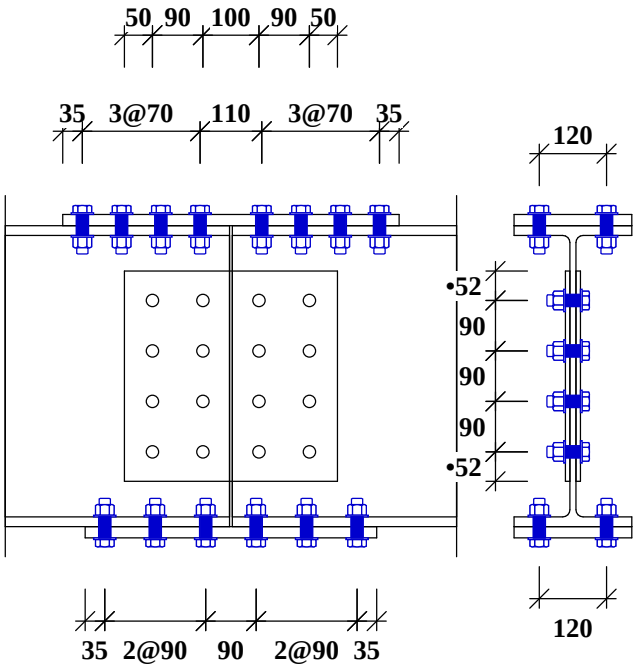

Splice Plates

Top Flange
1 No 600 x 210 x 20 mm (20 kg)

Web
2 No 380 x 375 x 8 mm (2x9 kg)

Bottom Flange
1 No 520 x 210 x 20 mm (17 kg)

HSFG - Pt 2 Bolts (non-slip at service)
44 No. 20 mm Ø Bolts
In 22 mm Holes

Beams 533x210 UB 101 [S275]
All Plates S 275
Beam gap 5 mm

Beam-Splice Outer Plates

Non Bearing - Beam to Beam Moment Splice Connection to EC 3 (UK NAD)

Loading Case 001

Basic Data

User Defined Applied Forces at Interface

Resultant Forces M, Fv, F	+200.0 kNm, +0.0 kN, +0.0 kN (Bottom in tension)	
Beam Gap= 5 mm	Therefore No direct bearing.	
HSFG Bolts	Non-slip at service	
	Ultimate/Service factor for service force calculation.	1.2
Design to	EC 3: Part 1-8: 2005 Design of Joints	
SCI Green Book.	P398: Joints in steel construction: Moment-Resisting Joints to Eurocode 3	

Basic Dimensions

Beam-533x210UB101 [28]	D=536.7, B=210.0, T=17.4, t=10.8, r=12.7, py=265		
Bolts 20 mm Ø in 22 mm holes	HSFG - Pt 2 Bolts, Non-slip at Service		
Plates S 275	All weld grades provided to suit minimum connected steel grade		
Beam Capacities Mc, Fvc, Fc	692.2 kN.m, 946.7 kN, 3409.5 kN	Mc = 692.2 kN.m	OK

Summary of Results (Unity Ratios)

Top Flange in Compression Bolt Capacity		0.45	OK
Top Flange in Compression Axial Capacity		0.32	OK
Bottom Flange in Tension Bolt Capacity		0.60	OK
Bottom Flange in Tension Axial Capacity		0.32	OK
Web Bolt Capacity	0.41, 0.34	0.41	OK
Web Plate Shear Capacity	0.00, 0.00, 0.00	0.00	OK
Web Plate Moment Capacity		0.35	OK
Web Axial Capacity		0.00	OK

Resultant Forces

Distribution of Moments	Total 200.0 kN.m, Flanges 164.0 kN.m, Web 36.0 kN.m

Flange forces

Min Flange Force=10% • A_f • py	10% • 3654 • 265	96.8 kN
Top Flange Force=Ff / 2-Mf / d	0.0 / 2 - 164.0 / 0.537	-305.6 kN
Bot Flange Force=Ff / 2+Mf / d	0.0 / 2 + 164.0 / 0.537	305.6 kN

Software produced by www.MasterSeries.com © Civil and Structural Computer Services Limited.

MasterSeries Sales Team
3 Castle Street
Carrickfergus
Co. Antrim BT38 7BE
Tel : 028 9036 5950

10002

Job Ref : **1472**
Sheet : **C / 686**
Made by : **Tommy White**
Date : **04 August 2017 / Ver. 2017.08**
Checked :
Approved :

Web Forces

M res Fn(Fv, ecc, Mecc, Mweb)	0.0, 95.0, 0.0, 36.0	36.0 kN.m	
Lever Arms Lv, Lh, Ld	135.0, 45.0, 142.3		
Moment Forces Fmv, Fmh	16.7, 50.0		
Shear Component fv=Fv / bolts	0.0 / 8	0.0 kN	
Axial Component fp=Fw / bolts	0.0 / 8	0.0 kN	

Resultant Web Bolt Forces

Fvx=fmh+fp	50.0 + 0.0	50.0 kN	
Fvy=fmv+fv	16.7 + 0.0	16.7 kN	
$Fvxy=\sqrt{(Fvx^2+Fvy^2)}$	$\sqrt{(50.0^2 + 16.7^2)}$	52.7 kN	
Bolts	In Line		

Top Flange in Compression

Bolt Shear Capacity

Outer Plate: P_1, e_1, P_2, e_2, α_b, k_1	70.0, 35.0, 120.0, 45.0, 0.530, 2.500		
$F_{b,Rd}=k_1 \cdot \alpha_b \cdot f_{ub} \cdot d \cdot t_p / \gamma_{M2}$	2.5 • 0.530 • 410 • 20 • 20.0 / 1.25	173.9 kN	
Flange: P_1, e_1, P_2, e_2, α_b, k_1	70.0, 52.5, 120.0, 45.0, 0.795, 2.500		
$F_{b,Rd}=k_1 \cdot \alpha_b \cdot f_{ub} \cdot d \cdot t_p / \gamma_{M2}$	2.5 • 0.795 • 410 • 20 • 17.4 / 1.25	227.0 kN	
$F_{p,c}=0.7 \cdot f_{ub} \cdot A$	0.7 • 1000 • 245.0	171.5 kN	
$F_{v,Rd}=k_s \cdot \mu \cdot F_{p,c} / \gamma_{M3ser}$•Utl factor	1.00 • 0.45 • 171.5 / 1.1 • 1.2	84.2 kN	
$F_{v,Rd} < F_{b,Rd}$			
$F_{Rd}= n \cdot f_{v,Rd} \cdot rows$	4 • 84.2 • 2	673.5 kN	OK

Plate and Flange Capacity

Outer Plate $p_1=\max(p_{1,fp}, p_{1,j})$	max(70, 110)	110	
Buckling factor, κ	$p_1/T < 9 \cdot \varepsilon$, 5.5 < 9•0.94	1.00	
$N_{b,fp,Rd}$ Outer Plate $=\kappa \cdot T \cdot B \cdot P_y / \gamma_{M0}$	1.00•20.0•210.0•265 / 1.0	1113.0 kN	
$N_{b,fp,Rd}$ Flange $=T \cdot B \cdot P_y / \gamma_{M0}$	17.4•210.0•265 / 1.0	968.3 kN	
Resultant Axial load		-305.6 kN	
Axial Capacity	Min(1113.0, 968.3)	968.3 kN	OK

Bottom Flange in Tension

Bolt Shear Capacity

Outer Plate: P_1, e_1, P_2, e_2, α_b, k_1	90.0, 35.0, 120.0, 45.0, 0.530, 2.500		
$F_{b,Rd}=k_1 \cdot \alpha_b \cdot f_{ub} \cdot d \cdot t_p / \gamma_{M2}$	2.5 • 0.530 • 410 • 20 • 20.0 / 1.25	173.9 kN	
Flange: P_1, e_1, P_2, e_2, α_b, k_1	90.0, 42.5, 120.0, 45.0, 0.644, 2.500		
$F_{b,Rd}=k_1 \cdot \alpha_b \cdot f_{ub} \cdot d \cdot t_p / \gamma_{M2}$	2.5 • 0.644 • 410 • 20 • 17.4 / 1.25	183.8 kN	
$F_{p,c}=0.7 \cdot f_{ub} \cdot A$	0.7 • 1000 • 245.0	171.5 kN	
$F_{v,Rd}=k_s \cdot \mu \cdot F_{p,c} / \gamma_{M3ser}$•Utl factor	1.00 • 0.45 • 171.5 / 1.1 • 1.2	84.2 kN	
$F_{v,Rd} < F_{b,Rd}$			
$F_{Rd}= n \cdot f_{v,Rd} \cdot rows$	3 • 84.2 • 2	505.1 kN	OK

Plate and Flange Capacity

Outer Plate

$F_{cap}=T \cdot B \cdot P_y / \gamma_{M0}$	20.0•210.0•265 / 1.0	1113.0 kN	
$F_{net}=0.9 \cdot (T \cdot B_{net}) \cdot F_{ult} / \gamma_{M2}$	0.9•(20.0 • 166.0) • 410 / 1.1	1113.7 kN	
$F_{blk}=T \cdot l_t \cdot p_u/\gamma_{m2}+2 \cdot T \cdot l_v \cdot p_y / \gamma_{m0}/1.73$	20.0•68.0•410/1.1 + 2•20.0 • 160.0 • 265/1.0/1.73	1486.1 kN	

Flange

$F_{cap}=T \cdot B \cdot P_y / \gamma_{M0}$	17.4•210.0•265 / 1.0	968.3 kN	
$F_{net}=0.9 \cdot (T \cdot B_{net}) \cdot F_{ult} / \gamma_{M2}$	0.9•(17.4 • 166.0) • 410 / 1.1	968.9 kN	
Resultant Axial load		305.6 kN	
Axial Capacity	Min(1113.0, 968.3)	968.3 kN	OK

Web Zone

Bolt Shear Capacity

Plate: P_1, e_1, P_2, e_2, $\alpha_{b\cdot\cdot}$ k_{1v}, α_{bh}, k_{1h}	90.0, 50.0, 90.0, 50.0, 0.758, 2.500, 0.758, 2.500		
$F_{b,v,Rd}=k_{1v} \cdot \alpha_{bv} \cdot f_{ub} \cdot d \cdot t_p / \gamma_{M2}$	2.50 • 0.758 • 410 • 20 • 16.0 / 1.25	198.8 kN	
$F_{b,h,Rd}=k_{1h} \cdot \alpha_{bh} \cdot f_{ub} \cdot d \cdot t_p / \gamma_{M2}$	2.50 • 0.758 • 410 • 20 • 16.0 / 1.25	198.8 kN	
Plate $Fvx/F_{b,h,Rd}+Fvy/F_{b,v,Rd} < 1$	50.0/198.8+16.7/198.8	0.335	OK
Web: P_1, e_1, P_2, e_2, α_b, k_1	90.0, 47.5, 90.0, 133.4, 0.720, 2.500		

MasterSeries Sales Team
10002
3 Castle Street
Carrickfergus
Co. Antrim BT38 7BE
Tel : 028 9036 5950

Job Ref : **1472**
Sheet : **C / 687**
Made by : **Tommy White**
Date : **04 August 2017 / Ver. 2017.08**
Checked :
Approved :

$F_{b,Rd}=k_1 \cdot \alpha_b \cdot f_{ub} \cdot d \cdot t_p / \gamma_{M2}$	2.5 • 0.720 • 410 • 20 • 10.8 / 1.25	127.5 kN	
$F_{p,c}=0.7 \cdot f_{ub} \cdot A$	0.7 • 1000 • 245.0	171.5 kN	
$F_{v,Rd}=k_s \cdot \mu \cdot F_{p,c} / \gamma_{M3ser} \cdot$Utl factor	1.00 • 0.45 • 171.5 / 1.1 • 1.2	84.2 kN	
Min($2 \cdot F_{v,Rd}$, $F_{b,Rd}$)	Min(2 • 168.4, 127.5)	127.5	OK

Plate Capacity per plate

App. Shear V/2	0.0/2	0.0 kN	
$V_{Rd.g}=(h_p \cdot t_p / 1.27) \cdot (f_{yp} / \sqrt{3} / \gamma_{M0})$	(375•8/1.27) • (275/√3/1.0)	375.1 kN	OK
$V_{Rd.n}=A_{v.Net} \cdot f_{up} / \sqrt{3} / \gamma_{M2net}$	2296 • 410/√3/1.1	494.1 kN	OK
$V_{Rd.b}=(0.5 \cdot f_{up} \cdot A_{nt} / \gamma_{M2net})$	(0.5 • 410 • 856 / 1.1)		
$+(F_{yp} \cdot A_{nv} / \sqrt{3} / \gamma_{M0})$	+ (275 • 1964 / √3/1.0)	471.4 kN	OK
App. Moment=(Mweb+V • ecc)/2	(36.0 + 0.0 • 95.0)/2	18.0 kN.m	
$M_c= W_{el} \cdot F_{yp} / \gamma_{M0}$	187500(1-0.00) • 275 / 1.0)	51.6 kN	OK

Web Capacity

$F_{cap}=T \cdot B \cdot P_y / \gamma_{M0}$	10.8•501.9•265 / 1.0	1436.4 kN	
$F_{net}=0.9 \cdot (T \cdot B_{net}) \cdot F_{ult} / \gamma_{M2}$	0.9•(10.8 • 413.9) • 410 / 1.1	1499.5 kN	
$F_{blk}=T \cdot l_t \cdot p_u / \gamma_{m^2} + 2 \cdot T \cdot l_v \cdot p_y / \gamma_{m0} / 1.73$	10.8•204.0•410/1.1 + 2•10.8 • 104.5 • 265/1.0/1.73	1166.5 kN	OK
$A_{v,net}=A_{v,w}-N_{br} \cdot d_0 \cdot t_w$	6187.9-4•22•10.8	5237 mm²	
$V_{w,n,Rd}=A_{v,net} \cdot f_{u,w} / 1.73 / \gamma_{M2}$	5237•410/1000/1.73/1.25	991.8 kN	OK

MasterSeries Sales Team
3 Castle Street
Carrickfergus
Co. Antrim BT38 7BE
Tel : 028 9036 5950

10002

Job Ref	**: 1472**
Sheet	**: C / 689**
Made by	**: Tommy White**
Date	**: 04 August 2017 / Ver. 2017.08**
Checked	**:**
Approved	**:**

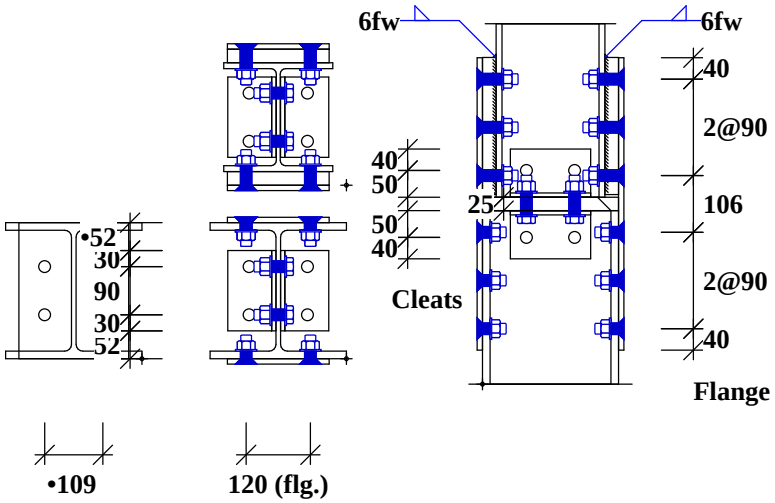

Upper Column 203x203 UC 46 [S275]
Lower Column 254x254 UC 73 [S275]
External Flange Plates
2/546 x 190 x 10 mm (2x8 kg)
External Packers
2/256 x 190 x 25 (aprox) mm (2x10 kg)
Welded to Flange with 6 mm FW (top & si

Bearing Divider Plate
254 x 205 x 25 mm (10 kg)

Web Angle Cleats
4/90 x 90 x 8 Ang x 150 mm (4x2 kg)
2 bolts per leg. 90 cc with 50 back mark

HSFG - Pt 2 Bolts (non-slip at service)
32 No. 20 mm Ø Bolts
In 22 mm Holes

All Plates S 275
Column Prepared for Direct Bearing

Column Splice with division Plate
Bearing - Column Splice Connection to EC 3 (UK NAD)
Basic Data

User Defined Applied Forces at Interface

F_C	Maximum Factored Axial Load	150.0 kN	Compression
F_{CD}	Minimum Factored Axial Load	140.0 kN	Compression
M	Factored Moment	25.0 kN.m	
F_v	Factored Shear Force	0.0 kN	
Web Division Plate	Direct Bearing assumed		
	All Moment and Axial loads resisted by Flanges		
	All Shear loads resisted by Web bolts and Friction		
HSFG Bolts	Non-slip at service		
	Ultimate/Service factor for service force calculation.	1.2	
Design to	EC 3: Part 1-8: 2005 Design of Joints		
	SCI Green Book		
	P358: Joints in steel construction: Simple Joints to Eurocode 3		

Basic Dimensions

Upper Column-203x203UC46 [28]	D=203.2, B=203.6, T=11.0, t=7.2, r=10.2, py=275, F_c=1615 kN
Lower Column-254x254UC73 [28]	D=254.1, B=254.6, T=14.2, t=8.6, r=12.7, py=275, F_c=2560 kN
Bolts 20 mm Ø in 22 mm holes	HSFG - Pt 2 Bolts, Non-slip at Service
Plates S 275	All weld grades provided to suit minimum connected steel grade

Summary of Results (Unity Ratios)

Plate & Flange Capacity in Tension	0.12	OK
Flange Bolts Shear Capacity Bolt Capacity	0.16	OK
Flange Bolts Shear Capacity Packer Weld	0.05	OK

Resultant Forces

F_{1p} =+M/D+F_C/ 2	+25.0/203.2 + 150.0 / 2	198.0 kN	
F_{1n} =- M/D+F_C/ 2	- 25.0/203.2 + 150.0 / 2	-48.0 kN	
F_{2p} =+M/D-F_{CD}/ 2	+25.0/203.2 + 140.0 / 2	193.0 kN	
F_{2n} =- M/D-F_{CD}/ 2	- 25.0/203.2 + 140.0 / 2	-53.0 kN	
F_1(comp)=max(0, F_{1p}, F_{1n}, F_{2p}, F_{2n})	max(0, 198.0,-48.0, 193.0, -53.0)	198.0 kN	compression
F_2(tens)=min(0, F_{1p}, F_{1n}, F_{2p}, F_{2n})	min(0, 198.0,-48.0, 193.0, -53.0)	-53.0 kN	tension

MasterSeries Sales Team
10002
3 Castle Street
Carrickfergus
Co. Antrim BT38 7BE
Tel : 028 9036 5950

Job Ref : **1472**
Sheet : **C / 690**
Made by : **Tommy White**
Date : **04 August 2017 / Ver. 2017.08**
Checked :
Approved :

Detailing Practice

Bearing

Bearer provided		25.0 mm	
$Tk_{req}=((D_L-2 \cdot T_L) -(D_U-2 \cdot T_U))/2$	((254.1 - 2 • 14.2) -(203.2 - 2 • 11.0))/2	22.3 mm	OK

External Cover Plates

$T_k >= T_c/2$ & > 10	min = 10.0 say 10 mm	10 mm	OK
$L_{fp} >= B_1$& > 225	min = 225.0 say 225 mm	261 mm	OK
$W_{fp} >= B_1-2 \cdot Pk_{weld}$	min = 191.6 say 175 mm	190 mm	OK
H c/c >= Table G.24	min = 90.0 mm	120 mm	OK
Packer <= 4/3•Ø	max = 4/3•20 = 26.7 say 27 mm	25.5 mm	welded OK
Rows Bolts	min = 2	3	OK

Plate & Flange Capacity in Compression

$N_{b,fp,Rd}$ Upper Flange $=T \cdot B \cdot P_y/ \gamma_{M0}$	11.0•203.6•275 / 1.0	615.9 kN	
$N_{b,fp,Rd}$ Lower Flange $=T \cdot B \cdot P_y/ \gamma_{M0}$	14.2•254.6•275 / 1.0	994.2 kN	
Outer Plate $p_1=\max(p_{1,fp}, p_{1,j})$	max(90, 106)	106	
$i_n=T/\sqrt{12}$	$10/\sqrt{12}$	2.89	
$\lambda_{bar}=0.6 \cdot p_1/(i_p \cdot 93.9 \cdot \varepsilon)$	0.6•106/(2.89 •93.9 • 0.92)	0.25	
$\kappa=\min(1.0, 1/(\phi+\sqrt{(\phi^2-\lambda_{bar}^2)}))$	$\min(1.0, 1/(0.55 + \sqrt{(0.55^2-0.25^2)}))$	0.97	
$N_{b,fp,Rd}$ Outer Plate $=\kappa \cdot T \cdot B \cdot P_y/ \gamma_{M0}$	0.97•10.0•190.0•275 / 1.0	508.2 kN	

Compression Capacity

Capacity $=\min(F_U, F_L, F_O)$	615.9, 994.2, 508.2	508.2 kN	
Minimum Resistance Check	$2 \cdot N_{Rd} > 0.25 \cdot F_C$, 1016.4 > 37.5		OK

Plate & Flange Capacity in Tension

Counter Sink Area $A_{cs}=(Ø-Ø'/2)^2$	$(20.0 - 22.0/2)^2$	81.0 mm²	

Upper Flange

$F_{cap}=T \cdot B \cdot P_y/ \gamma_{M0}$	11.0•203.6•275 / 1.0	615.9 kN	
$F_{net}=0.9 \cdot (T \cdot B_{net}) \cdot F_{ult}/ \gamma_{M2}$	0.9•(11.0 • 159.6) • 410 / 1.1	588.9 kN	

Lower Flange

$F_{cap}=T \cdot B \cdot P_y/ \gamma_{M0}$	14.2•254.6•275 / 1.0	994.2 kN	
$F_{net}=0.9 \cdot (T \cdot B_{net}) \cdot F_{ult}/ \gamma_{M2}$	0.9•(14.2 • 210.6) • 410 / 1.1	1003.2 kN	

Outer Plate

$F_{cap}=T \cdot B \cdot P_y/ \gamma_{M0}$	10.0•190.0•275 / 1.0	522.5 kN	
$F_{net}=0.9 \cdot (T \cdot B_{net}-n \cdot A_{cs}) \cdot F_{u'}/ \gamma_{M2}$	0.9•(10.0 • 146.0 - 2 • 81) • 410 / 1.1	435.4 kN	
$F_{blk}=T \cdot l_t \cdot p_u/\gamma_{m2}+2 \cdot T \cdot l_v \cdot p_y/ \gamma_{m0}/1.73$	10.0•48.0•410/1.1 + 2•10.0 • 165.0 • 275/1.0/1.73	702.9 kN	

Tension Capacity

Capacity $=\min(F_U, F_L, F_O)$	588.9, 994.2, 435.4	435.4 kN	
Applied Tensile Force		53.0 kN	OK

Flange Bolts Shear Capacity

$F_{app}=\max(F_{ten}, F_{tie})$	Max(53.0, 0.0) (direct bearing >> check tension only)	53.0 kN	
90 degree Countersunk bolts	[1] Reduce bearing thickness by Ø/2 - Ø'/4 (cl 6.3.3.2)	4.50 mm	
Outer Plate: P_1, e_1, P_2, e_2, α_b, k_1	90.0, 40.0, 120.0, 35.0, 0.606, 2.500		
$F_{b,Rd}=k_1 \cdot \alpha_b \cdot f_{ub} \cdot d \cdot t_p/ \gamma_{M2}$	2.5 • 0.606 • 410 • 20 • 5.5 / 1.25	54.7 kN	
Col Upper: P_1, e_1, P_2, e_2, α_b, k_1	90.0, 40.5, 0.0, 41.8, 0.614, 2.500		
$F_{b,Rd}=k_1 \cdot \alpha_b \cdot f_{ub} \cdot d \cdot t_p/ \gamma_{M2}$	2.5 • 0.614 • 410 • 20 • 36.5 / 1.25	366.8 kN	
Col Upper: P_1, e_1, P_2, e_2, α_b, k_1	90.0, 40.5, 0.0, 67.3, 0.614, 2.500		
$F_{b,Rd}=k_1 \cdot \alpha_b \cdot f_{ub} \cdot d \cdot t_p/ \gamma_{M2}$	2.5 • 0.614 • 410 • 20 • 14.2 / 1.25	142.9 kN	
$F_{p,c}=0.7 \cdot f_{ub} \cdot A$	0.7 • 1000 • 245.0	171.5 kN	
$F_{v,Rd}=k_s \cdot \mu \cdot F_{p,c} / \gamma_{M3ser} \cdot$Utl factor	1.00 • 0.35 • 171.5 / 1.1 • 1.2	65.5 kN	
Resultant Bolt Shear Capacity	Min(366.8, 142.9, 54.7, 65.5)	54.7 kN	
Bolt Shear Load F / No Bolts	53.0/ 6	8.8 kN	OK
$F_{packer}=F_{app} \cdot t_{pa}/ (t_{pa}+t_b)$	53.0•25.5 / (25.5 + 11.0)	37.0 kN	
$F_{cap}=py \cdot (2 \cdot L+1.25 \cdot W-6 \cdot F_w)$	223•(2 • 256 + 1.25 • 190 - 6 • 6)	673.4 kN	OK
Minimum Resistance Check	$2 \cdot F_{Rd,fp} > 0.25 \cdot F_C$, 656.0 > 37.5		OK

MasterSeries Sales Team
3 Castle Street
Carrickfergus
Co. Antrim BT38 7BE
Tel : 028 9036 5950

10002

Job Ref	**: 1472**
Sheet	**: C / 692**
Made by	**: Tommy White**
Date	**: 04 August 2017 / Ver. 2017.08**
Checked	**:**
Approved	**:**

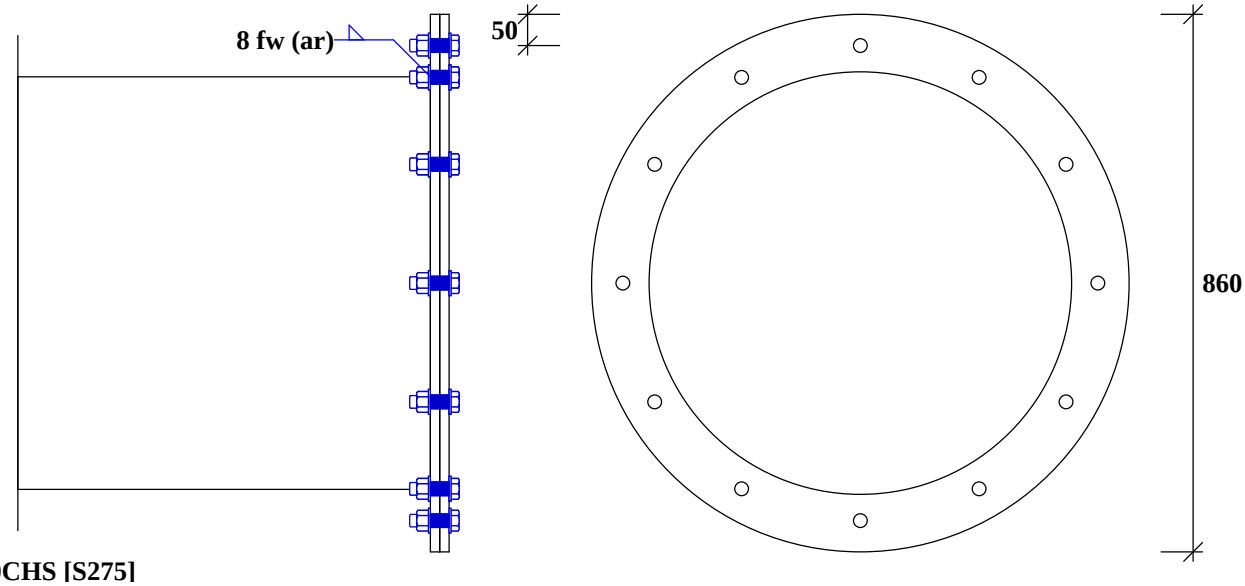

660x20CHS [S275]
End-Plate 860x15 mm (68 kg)
Plates S 275
12 No. M20 Grade 8.8 Bolts in 22 mm holes
On 760 mm PCD

CHS Hollow Section Splice
Hollow Section Splice Connection to EC 3 (UK NAD)
Loading Case 001
Basic Data

User Defined Applied Forces at Interface

Applied Forces	F = -300.0 kN (T), M_{xx} = +30.0 kNm,
Design to	EC 3: Part 1-8: 2005 Design of Joints
	SCI Green Book
	P358: Joints in steel construction: Simple Joints to Eurocode 3

Basic Dimensions

Beam-660x20CHS [28]	Ø=660.0, T=20.0, py=265
Bolts 20 mm Ø in 22 mm holes	Grade 8.8 Bolts
Plates S 275	All weld grades provided to suit minimum connected steel grade

Summary of Results (Unity Ratios)

End-Plate & Bolts	0.35, 0.39, 0.25	0.39	OK
Welds		0.19	OK
Section Capacity	0.04, 0.01, 0.04	0.04	OK

Check 1: Detailing Practice

Bolt Pitch	2.5•20 >= P <= 10•20 50 >= P <= 200	199 mm	OK

Additional Bolt force from Moment

$P_{yb}=P_{yc}-F/A$	265 - -300/402.12	265 N/mm²
Compression zone	H_{comp} = 5.00 => A • Py = 3.82 cm²•265 N/mm²	101.31 kN
$F_{tmax}=M/\sum L_a$	30/3036.4	9.88 kN
Design F $=F-F_{tmax \cdot N_{tot}}$	-300 - 9.9 • 12	-418.56 kN

MasterSeries Sales Team
10002
3 Castle Street
Carrickfergus
Co. Antrim BT38 7BE
Tel : 028 9036 5950

Job Ref : **1472**
Sheet : **C / 693**
Made by : **Tommy White**
Date : **04 August 2017 / Ver. 2017.08**
Checked :
Approved :

Check 2: Complete end-plate yielding

$K_1=\ln(r_2/ r_3)$	ln(380.000 /320.000)	0.17	
$K_3=K_1+2$	0.172 + 2	2.17	
$F_3=1/(2\bullet K_1)\bullet(K_3+\sqrt{(K_3^2 -4\bullet K_1)})$	$1/(2\bullet 0.172)\bullet(2.172 + \sqrt{(2.172^2 -4\bullet 0.172)})$	12.2	
$F_t=t_p^2\bullet p_y\bullet\pi\bullet F_3 / 2$	$15^2 \bullet 275 \bullet \pi \bullet 12.159/2$	1181.8 kN	OK

Check 3: Bolt failure with end-plate yielding

$F_{t,Rd}=k_2\bullet f_{ub}\bullet A / \gamma_{m2}$	0.90•800•245/1.25	141.1 kN	
$F_t=N\bullet F_{t,Rd} /(1-1/F_3+1/(F_3\bullet\ln(r_1/r_2)))$	$12\bullet 141.1 / (1 - 1 / 12.16 + 1 / (12.16\bullet \ln(430.0/380.0)))$	1069.7 kN	OK

Check 4: Bolt Failure

$Ft=N \bullet F_{t,Rd}$	12.0•141.1	1693.4 kN	OK

Check 5: Welds

$f_{vw,d} =f_u / (\sqrt{3}\bullet ß_w\bullet\gamma_{M2})$	$410.0 / (\sqrt{3} \bullet 0.85 \bullet 1.25)$	222.8 N/mm²	

Weld in Tension (Load per mm run)

$F_a=F/\pi/D$	$300.0 / \pi / 660.0$	0.145 kN/mm	
$Z_{weld}=\pi\bullet(D_1^4- D_2^4)/(32\bullet D_1)$	$\pi\bullet(661.0^4 - 659.0^4)/(32 \bullet 661.0)$	341.6 cm³	
$F_m=M/Z_{weld}$	30.0 / 341.6	0.088 kN/mm	
Net Tensile load $F_t=F_a+F_m$	0.145 + 0.088	0.233 kN/mm	
$P_t=0.7\bullet s\bullet f_{vw,d}$	0.7•8.0•223	1.2 kN	OK

Check 6: Member Capacity

$F_{cap}=A\bullet p_y$	402.12•265	10656.3 kN	OK
$M_{cap} =Fn(Z_{xx}, S_{xx}, p_y)$	6245, 8195, 265	2171.6 kN	OK
Combined $F_{app}/F_{cap}+M_{app}/M_{cap}$	300/10656.3 + 30/2171.6	0.042	OK

MasterSeries Sales Team
3 Castle Street
Carrickfergus
Co. Antrim BT38 7BE
Tel : 028 9036 5950

10002

Job Ref	: 1472
Sheet	: C / 695
Made by	: Tommy White
Date	: 04 August 2017 / Ver. 2017.08
Checked	:
Approved	:

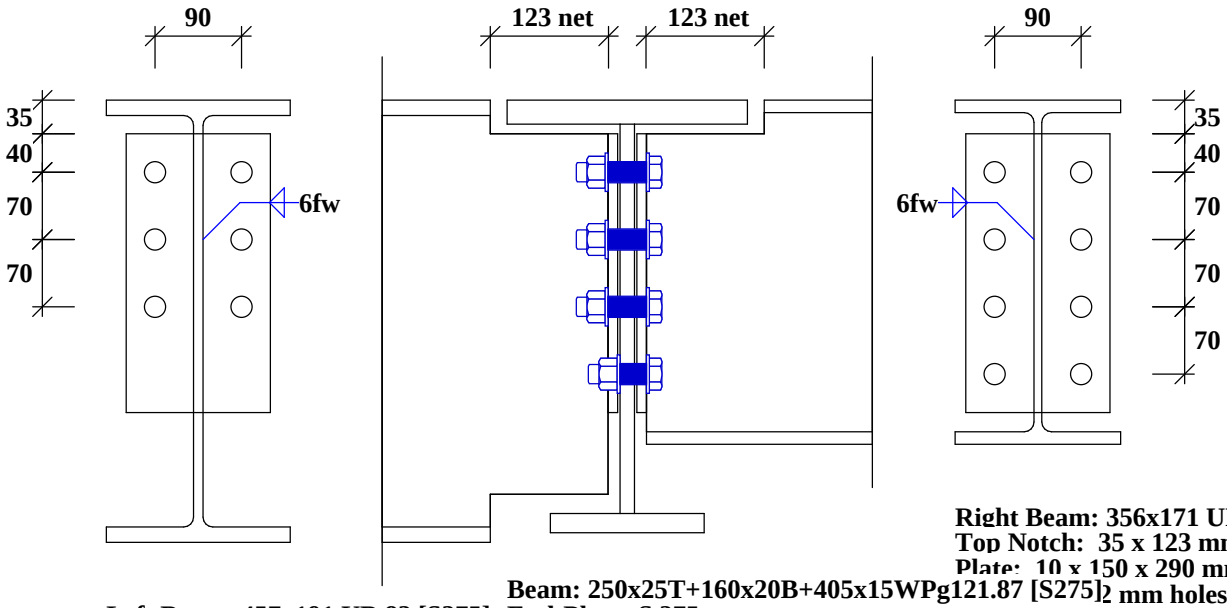

Left Beam: 457x191 UB 82 [S275]
Top Notch: 35 x 123 mm lg. net
Bot Notch: 50 x 123 mm lg. net
Plate: 10 x 150 x 290 mm dp. (3 kg)
With 6 No. 22 mm holes
For 20 mm Ø Grade 8.8 Bolts.

Beam: 250x25T+160x20B+405x15WPg121.87 [S275]
End-Plates S 275

Right Beam: 356x171 UB 57 [S275]
Top Notch: 35 x 123 mm lg. net
Plate: 10 x 150 x 290 mm dp. (3 kg)
2 mm holes
For 20 mm Ø Grade 8.8 Bolts.

Beam to Beam Flexible End-Plate - with Asymetrical Plate Girders
Beam to Beam Flexible End-plate Connection to EC 3 (UK NAD)
Basic Data

User Defined Applied Forces at Interface

Shear Forces	Left = 235.0 kN, Right = 170.0 kN
Tie Force	75.0 kN
Design to	EC 3: Part 1-8: 2005 Design of Joints
SCI Green Book	P358: Joints in steel construction: Simple joints to Eurocode 3

Basic Dimensions

Left-457x191UB82 [28]	D=460.0, B=191.3, T=16.0, t=9.9, r=10.2, py=275
Supporting-250x25T+160x20B+405x15WPg121.87 [28]	D=450.0, B=250.0, B_2=160.0, T=25.0, T_2=20.0, t=15.0, py=265
Right-356x171UB57 [28]	D=358.0, B=172.2, T=13.0, t=8.1, r=10.2, py=275
Bolts 20 mm Ø in 22 mm holes	Grade 8.8 Bolts
Plates S 275	All weld grades provided to suit minimum connected steel grade

Summary of Results (Unity Ratios)

Left Hand Beam

Check 4 Supported Beam Web Shear	410.2 >= 235.0kN	0.57	OK
Checks 1 & 2 Detailing Practice	1.00, 0.83, 1.00, 0.64, 0.710.94	1.00	OK
Check 5: Notch Resistance	0.50	0.50	OK
Check 6: Notch Stability	0.54	0.54	OK
Checks 8 & 9 Bearing & Shear	451.6, 451.6, 451.6, 964.1, 760.8 >= 235.0kN	0.52	OK
Check 10 Shear	596.7, 626.2 >= 181.3kN	0.30	OK
Check 10 Combined Bearing	199.4 >= 60.4kN	0.30	OK
Check 11-14 Tie Forces	296.9, 506.3, 962.2, 1070.1 >= 235.0kN	0.79	OK

MasterSeries Sales Team
3 Castle Street
Carrickfergus
Co. Antrim BT38 7BE
Tel : 028 9036 5950

10002

Job Ref	**: 1472**
Sheet	**: C / 696**
Made by	**: Tommy White**
Date	**: 04 August 2017 / Ver. 2017.08**
Checked	**:**
Approved	**:**

Right Hand Beam

Check 4 Supported Beam Web Shear	335.7 >= 170.0kN	0.51	OK
Checks 1 & 2 Detailing Practice	1.00, 0.83, 1.00, 0.64, 0.710.77	1.00	OK
Check 5: Notch Resistance	0.39	0.39	OK
Check 6: Notch Stability	0.35	0.35	OK
Checks 8 & 9 Bearing & Shear	602.1, 602.1, 602.1, 869.4, 691.0 >= 170.0kN	0.28	OK
Check 11-14 Tie Forces	371.5, 663.0, 1282.9, 875.5 >= 170.0kN	0.46	OK

Left Hand Beam

Check 1: Recommended Detailing Practice

Plate Depth >= 0.6•D	0.6 • 460 = 276 mm	290 mm	OK
10 >= t_p<= 12	10.0 mm		OK
90 <= p_3 <= 140	90 mm		OK

Check 4: Supported Beam Web Shear

$V_{pl_{Rd}}$=0.9•t_{bw}•h_{pw}•f_{ybw} / (√3•γ_{M0})	0.9 • 9.9 • 290 • 275 / (√3 • 1.0)	410.2 kN	OK

Check 2: Supported Beam Welds

a=0.4 t_{wb1}	0.4 • 9.9	4.0 mm	
a_1=a•V_{Ed}/ $V_{pl,Rd}$•1.27	4.0 • 235.0 / 410.2 • 1.27 (SCI AD370)	2.9 mm	
S_{min}=max(3, min(a, a_1)) / 0.7		4.3 mm	OK

Check 5: Supported Beam Notch Resistance

V_{Rd}=0.9•A_v.DN•f_{ybv} /(√3•γ_{M0})	0.9 • 3713 • 275 / (√3 • 1.0)	530.5 kN	Low Shear
$M_{v,Rd}$=$f_{y,b1}$•$W_{el,N,y}$/ γ_{M0}	275 • 232/1.0	63.8 kN.m	
V_{Rd}=Min(V_{Rd} , $M_{v,rd}$/ La)	Min(530.49, 63.81 / 135)	472.7 kN	OK

Check 6: Supported Beam - Double Notched Web Stability (restrained)

D_{nt}<= h_{b1} / 5	50.0 <= 460.0/ 5 mm	50.0 <= 92.0	OK
L_n <= h_{b1}		125 <= 460	OK

Check 7: Unrestrained Supported Beam. Overall Stability of Notched Beam

	Beam assumed to be restrained		ignored

Check 8a: Bolt Shear

$F_{v,Rd}$=α_v•f_{ub}•A / γ_{M2}	0.6 • 800 • 245.0 / 1.25	94.1 kN	
V_{Rd1}=0.8•n•$F_{v,Rd}$•cols	0.8 • 3 • 94.1 • 2	451.6 kN	OK

Check 8b: End-Plate Bearing

P_1, e_1, P_2, e_2, α_b, k_1	70.0, 40.0, 90.0, 30.0, 0.606, 2.118		
$F_{b,Rd}$=k_1• α_b•f_{up}•d•t_p/ γ_{M2}	2.1 • 0.606 • 410 • 20 • 10.0 / 1.25	84.2 kN	
0.80•$F_{v,Rd}$ < $F_{b,Rd}$			
F_{Rd}=0.80• n•$f_{v,Rd}$•rows	0.80 • 3 • 94.1 • 2	451.6 kN	OK

Check 8c: Supporting Beam Web Bearing

α_b=Min(p_1/d_0/3-¼, f_{ub}/ f_u, 1)	Min(70/22/3-¼, 800/410, 1) » Min(0.811, 1.951, 1)	0.811	
$k_{1,inn}$=min(2.5, 1.4•p_2/d_0-1.7)	min(2.5, 1.4 • 90/22 - 1.7 » Min(2.5, 4.0)	2.500	
$F_{b,Rd}$=k_1•α_b•$f_{u,2}$ •d•t_p/ γ_{M2}	2.5 • 0.811 • 410 • 20.0 • 15.0 / 1.25	199.4 kN	
0.80•$F_{v,Rd}$ < $F_{b,Rd}$			
F_{Rd}=0.80• n•$f_{v,Rd}$•rows	0.80 • 3 • 94.1 • 2	451.6 kN	OK

Check 9a: End-Plate Plane Shear

V_{Rd4}=2• h_p•t_p•F_{yp}/(1.27•√3•γ_{M0})	2•290 • 10 • 275/(1.27 • √3 • 1.0)	725.1 kN	OK
V_{Rd}=2• t_p•(h_p-n_1•d_0)•F_{up}/(√3•γ_{M2})	2•10•(290 - 3 • 22) • 410/(√3 • 1.1)	964.1 kN	OK

Check 9b: End-Plate Block Shear

A_{nv}, A_{nt}=Fn(t_p, h_p, e_1, e_2, n_1, d_0)	(10, 290, 40, 30, 3, 22)	1950, 190 mm²	
V_{Rd}=2•(F_{up}•A_{nt}/γ_{M2}+f_{yp}•A_{nv}/(√3•γ_{M0}))	2•(410 • 190 / 1.1 + 2751950 • /(√3 • 1.0)	760.8 kN	OK

Check 10: Supporting Member - Local Resistance

V_{ed}=(V_{ed1}+V_{ed2}•n_{shared}/n2)/2	(235 + 170•3/4)/2 (per shear plane)	181.3 kN	
A_v, A_{Vnet}=Fn(e_t, e_b, p_1, n, dia, T)	fn(75, 45, 70, 3, 22.0, 15.0)	3900, 2910 mm²	
V_{Rd}=A_v•F_{yp}/(√3•γ_{M0})	3900 • 265/(√3 • 1.0)	596.7 kN	OK

MasterSeries Sales Team
10002
3 Castle Street
Carrickfergus
Co. Antrim BT38 7BE
Tel : 028 9036 5950

Job Ref : **1472**
Sheet : **C / 697**
Made by : **Tommy White**
Date : **04 August 2017 / Ver. 2017.08**
Checked :
Approved :

$V_{Rd}=A_{vnet \cdot F_{up}}/(\sqrt{3} \cdot \gamma_{M2})$	2910 • 410/(√3 • 1.1)	626.2 kN	OK

Check 10: Combined Load Bearing on supporting web

$F_{ed}=V_{ed1}/n_1+V_{ed2}/n_2 <= F_{b,Rd}$	235.0/6 + 170.0/8	(per bolt) 60.4 kN	OK

Tie Forces

Applied Tie Force	235.0 kN		

Check 11: End-Plate in Bending

$L_{eff}=e_{1A}+(n-1) \cdot p_{1A}+e_{1A}$	40.0 + (3-1) • 70 + 45.1	225.1 mm	
$M_{pl1}=0.25 \cdot L_{eff} \cdot t^2 \cdot f_{u \cdot p}/ \gamma_{Mu}$	0.25 • 225.1 • 10² • 410 / 1.1	2.10 kN.m	
$F_{Rd \cdot u \cdot 1}=(8 \cdot n-2 \cdot e_w) \cdot m_{pl1}$	(8 • 30.0 - 2 • 8.3) • 2		
$/ (2 \cdot m \cdot n-e_w \cdot (m+n))$	/ (2 • 35.3 • 30.0 - 8.3 • (35.3 + 30.0))	296.9 kN	
$F_{Rd \cdot u \cdot 2}=$			
$(2 \cdot M_{pl2}+n \cdot S(k_2 \cdot f_{ub} \cdot A / \gamma_{mu}))/(m+n)$	(2•2.10 + 30.00•6•0.90•800•245/1.1)/ (35.3 + 30.0)	506.3 kN	
$F_{rd \cdot u \cdot 3}=S \cdot k_2 \cdot F_{ub} \cdot A_s/ \gamma_{Mu}$	6 • 0.90•800 • 245/1.1	962.2 kN	
$F_{Rd}=\min(F_{rd \cdot u \cdot 1}, F_{rd \cdot u \cdot 2}, F_{rd \cdot u \cdot 3})$	Min (296.87, 506.30, 962.18)	296.9 kN	OK

Check 12: Beam Web Tension

$F_{Rd}=t_{bw} \cdot h_{peff} \cdot F_{ubw} / \gamma_{Mu}$	9.9 • 290 • 410 / 1.1	1070.1 kN	OK

Check 13: Welds

n/a	Covered by Check 2		OK

Right Hand Beam

Check 1: Recommended Detailing Practice

Plate Depth >= 0.6•D	0.6 • 358 = 214.8 mm	290 mm	OK
$10 >= t_p <= 12$	10.0 mm		OK
$90 <= p_3 <= 140$	90 mm		OK

Check 4: Supported Beam Web Shear

$V_{pl_{Rd}}=0.9 \cdot t_{bw \cdot h_{pw \cdot f_{ybw}}} / (\sqrt{3} \cdot \gamma_{M0})$	0.9 • 8.1 • 290 • 275 / (√3 • 1.0)	335.7 kN	OK

Check 2: Supported Beam Welds

$a=0.4\ t_{wb1}$	0.4 • 8.1	3.2 mm	
$a_1=a \cdot V_{Ed}/ V_{pl \cdot Rd} \cdot 1.27$	3.2 • 170.0 / 335.7 • 1.27 (SCI AD370)	2.1 mm	
$S_{min}=\max(3, \min(a, a_1)) / 0.7$		4.3 mm	OK

Check 5: Supported Beam Notch Resistance

$V_{Rd}=A_v.N \cdot f_{ybw} /(\sqrt{3} \cdot \gamma_{M0})$	2719 • 275 / (√3 • 1.0)	431.6 kN	Low Shear
$M_{v \cdot Rd}=f_{v \cdot b1} \cdot W_{el \cdot N \cdot y}/ \gamma_{M0}$	275 • 221/1.0	60.8 kN.m	
$V_{Rd}=\mathrm{Min}(V_{Rd} , M_{v \cdot rd}/ La)$	Min(431.63, 60.81 / 135)	431.6 kN	OK

Check 6: Supported Beam - Single Notched Web Stability (restrained)

$D_{nt}<= h_{,1} / 2$	35.0 <= 358.0/ 2 mm	35.0 <= 179.0	OK
$L_n <= h_{b1}$		125 <= 358	OK

Check 7: Unrestrained Supported Beam. Overall Stability of Notched Beam

	Beam assumed to be restrained		ignored

Check 8a: Bolt Shear

$F_{v,Rd}=\alpha_v \cdot f_{ub} \cdot A / \gamma_{M2}$	0.6 • 800 • 245.0 / 1.25	94.1 kN	
$V_{Rd1}=0.8 \cdot n \cdot F_{v,Rd} \cdot cols$	0.8 • 4 • 94.1 • 2	602.1 kN	OK

Check 8b: End-Plate Bearing

$P_1,\ e_1,\ P_2,\ e_2,\ \alpha_b,\ k_1$	70.0, 40.0, 90.0, 30.0, 0.606, 2.118		
$F_{b,Rd}=k_1 \cdot \alpha_b \cdot f_{up} \cdot d \cdot t_p/ \gamma_{M2}$	2.1 • 0.606 • 410 • 20 • 10.0 / 1.25	84.2 kN	
$0.80 \cdot F_{v,Rd} < F_{b,Rd}$			
$F_{Rd}=0.80 \cdot n \cdot f_{v,Rd \cdot rows}$	0.80 • 4 • 94.1 • 2	602.1 kN	OK

Check 8c: Supporting Beam Web Bearing

$\alpha_b=\mathrm{Min}(p_1/d_0/3-¼, f_{ub}/ f_u, 1)$	Min(70/22/3-¼, 800/410, 1) » Min(0.811, 1.951, 1)	0.811	
$k_{1 \cdot inn}=\min(2.5, 1.4 \cdot p_2/d_0-1.7)$	min(2.5, 1.4 • 90/22 - 1.7 » Min(2.5, 4.0)	2.500	

MasterSeries Sales Team
10002
3 Castle Street
Carrickfergus
Co. Antrim BT38 7BE
Tel : 028 9036 5950

Job Ref : **1472**
Sheet : **C / 698**
Made by : **Tommy White**
Date : **04 August 2017 / Ver. 2017.08**
Checked :
Approved :

$F_{b,Rd}=k_1 \cdot \alpha_b \cdot f_{u,2} \cdot d \cdot t_p / \gamma_{M2}$	2.5 • 0.811 • 410 • 20.0 • 15.0 / 1.25	199.4 kN	
$0.80 \cdot F_{v,Rd} < F_{b,Rd}$			
$F_{Rd}=0.80 \cdot n \cdot f_{v,Rd \cdot rows}$	0.80 • 4 • 94.1 • 2	602.1 kN	OK

Check 9a: End-Plate Plane Shear

$V_{Rd4}=2 \cdot h_p \cdot t_p \cdot F_{yp}/(1.27 \cdot \sqrt{3} \cdot \gamma_{M0})$	2•290 • 10 • 275/(1.27 • √3 • 1.0)	725.1 kN	OK
$V_{Rd}=2 \cdot t_p \cdot (h_p - n_1 \cdot d_0) \cdot F_{up}/(\sqrt{3} \cdot \gamma_{M2})$	2•10•(290 - 4 • 22) • 410/(√3 • 1.1)	869.4 kN	OK

Check 9b: End-Plate Block Shear

$A_{nv}, A_{nt}=Fn(t_p, h_p, e_1, e_2, n_1, d_0)$	(10, 290, 40, 30, 4, 22)	1730, 190 mm²	
$V_{Rd}=2 \cdot (F_{up} \cdot A_{nt}/\gamma_{M2}+f_{yp} \cdot A_{nv}/(\sqrt{3} \cdot \gamma_{M0}))$	2•(410 • 190 / 1.1 + 2751730 • /(√3 • 1.0)	691.0 kN	OK

Check 10: Supporting Member - Local Resistance

See other side

Tie Forces

Applied Tie Force 170.0 kN

Check 11: End-Plate in Bending

$L_{eff}=e_{1A}+(n-1) \cdot p_{1A}+e_{1A}$	40.0 + (4-1) • 70 + 40.0	290.0 mm	
$M_{pl1}=0.25 \cdot L_{eff} \cdot t^2 \cdot f_{u \cdot p}/\gamma_{Mu}$	0.25 • 290.0 • 10² • 410 / 1.1	2.70 kN.m	
$F_{Rd \cdot u \cdot 1}=(8 \cdot n-2 \cdot e_w) \cdot m_{pl1}$	(8 • 30.0 - 2 • 8.3) • 3		
$/ (2 \cdot m \cdot n-e_w \cdot (m+n))$	/ (2 • 36.2 • 30.0 - 8.3 • (36.2 + 30.0))	371.5 kN	
$F_{Rd \cdot u \cdot 2}=$			
$(2 \cdot M_{pl2}+n \cdot S(k_2 \cdot f_{ub} \cdot A/\gamma_{mu}))/(m+n)$	(2•2.70 + 30.00•8•0.90•800•245/1.1)/ (36.2 + 30.0)	663.0 kN	
$F_{rd \cdot u \cdot 3}=S \cdot k_2 \cdot F_{ub} \cdot A_s/\gamma_{Mu}$	8 • 0.90•800 • 245/1.1	1282.9 kN	
$F_{Rd}=\min(F_{rd \cdot u \cdot 1}, F_{rd \cdot u \cdot 2}, F_{rd \cdot u \cdot 3})$	Min (371.49, 663.04, 1282.91)	371.5 kN	OK

Check 12: Beam Web Tension

$F_{Rd}=t_{bw} \cdot h_{peff} \cdot F_{ubw}/\gamma_{Mu}$	8.1 • 290 • 410 / 1.1	875.5 kN	OK

Check 13: Welds

n/a	Covered by Check 2		OK

MasterSeries Sales Team
3 Castle Street
Carrickfergus
Co. Antrim BT38 7BE
Tel : 028 9036 5950

10002

Job Ref	: 1472
Sheet	: C / 700
Made by	: Tommy White
Date	: 04 August 2017 / Ver. 2017.08
Checked	:
Approved	:

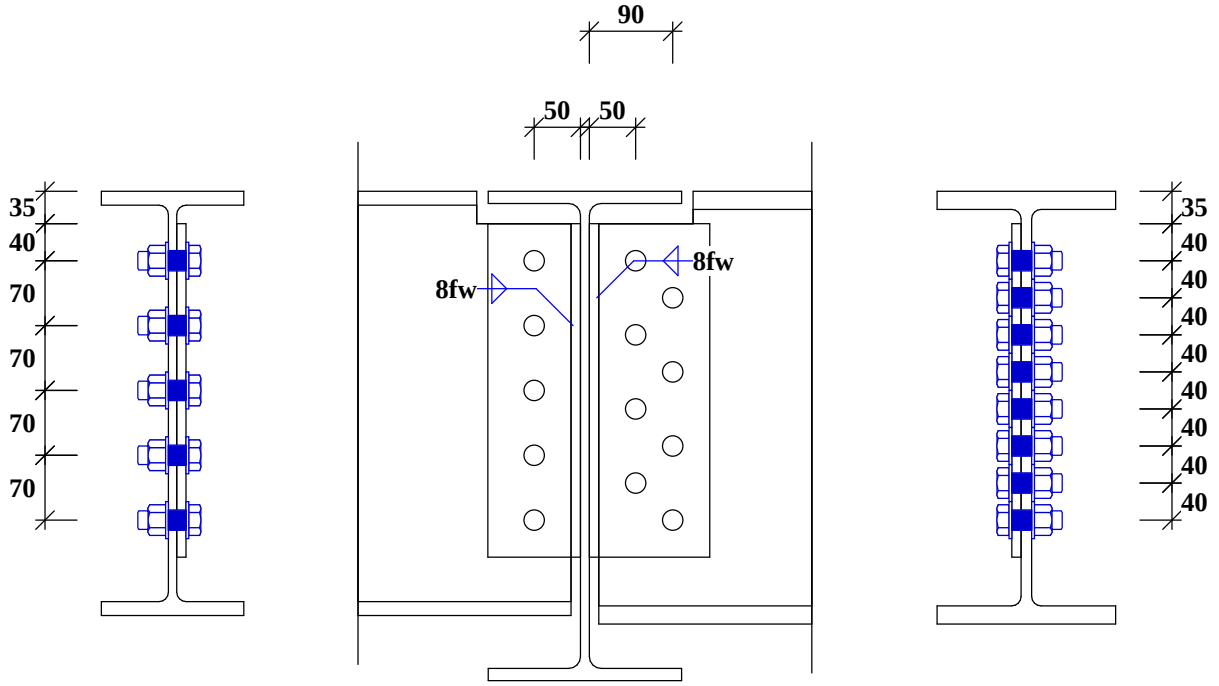

Left: 457x152 UB 67 [S275]
Top Notch: 35 x 102 mm lg. net
Plate: 10 x 100 x 360 mm dp. (3 kg)
With 5 No. 22 mm holes
For 20 mm Ø Grade 8.8 Bolts.

Beam: 533x210 UB 82 [S275]
Beam to web gap 10 mm
Fin-Plates S 275

Right: 457x191 UB 98 [S275]
Top Notch: 35 x 102 mm lg. net
Plate: 10 x 130 x 360 mm dp. (4 kg)
With 8 No. 22 mm holes
For 20 mm Ø Grade 8.8 Bolts.

Beam to Beam Fin-Plate
Beam to Beam Fin-plate Connection to EC 3 (UK NAD)
Basic Data

User Defined Applied Forces at Interface

Shear Forces	Left = 250.0 kN, Right = 120.0 kN
Tie Force	75.0 kN
Design to	EC 3: Part 1-8: 2005 Design of Joints
SCI Green Book	P358: Joints in steel construction: Simple joints to Eurocode 3

Basic Dimensions

Left-457x152UB67 [28]	D=458.0, B=153.8, T=15.0, t=9.0, r=10.2, py=275
Supporting-533x210UB82 [28]	D=528.3, B=208.8, T=13.2, t=9.6, r=12.7, py=275
Right-457x191UB98 [28]	D=467.2, B=192.8, T=19.6, t=11.4, r=10.2, py=265
Bolts 20 mm Ø in 22 mm holes	Grade 8.8 Bolts
Plates S 275	All weld grades provided to suit minimum connected steel grade

Summary of Results (Unity Ratios)

Left Hand Beam

Check 1 Detailing Practice	1.00	1.00	OK
Check 2: Bolt Shear & Bearing	0.65, 0.58, 0.69	0.69	OK
Check 3: Sup.Beam Connect Elmts.	0.56, 0.46, 0.59, 0.21	0.59	OK
Check 4: Supported Beam Resist.	0.40, 0.40, 0.69	0.69	OK
Check 5: Notch Resistance	0.40	0.40	OK
Check 6: Notch Stability	0.22	0.22	OK
Check 8: Welds	0.890.89	0.89	OK
Check 10: Supporting Member	0.34	0.34	OK
Check 11: Structural integrity-Plate	0.28, 0.30, 0.30, 0.5, 0.4	0.50	OK

MasterSeries Sales Team
10002
3 Castle Street
Carrickfergus
Co. Antrim BT38 7BE
Tel : 028 9036 5950

Job Ref : **1472**
Sheet : **C / 701**
Made by : **Tommy White**
Date : **04 August 2017 / Ver. 2017.08**
Checked :
Approved :

Check 12: Structural integrity-Beam	0.32, 0.34, 0.26, 0.5	0.50	OK

Right Hand Beam

Check 1 Detailing Practice	1.00	1.00	OK
Check 2: Bolt Shear & Bearing	0.19, 0.92, 0.81	0.92	OK
Check 3: Sup.Beam Connect Elmts.	0.27, 0.30, 0.36, 0.14, 0.10	0.36	OK
Check 4: Supported Beam Resist.	0.16, 0.19, 0.32, 0.07	0.32	OK
Check 5: Notch Resistance	0.16	0.16	OK
Check 6: Notch Stability	0.22	0.22	OK
Check 8: Welds	0.890.89	0.89	OK
Check 11: Structural integrity-Plate	0.18, 0.19, 0.19, 0.1, 0.7	0.70	OK
Check 12: Structural integrity-Beam	0.16, 0.17, 0.12, 0.6	0.60	OK

Left Hand Beam

Check 1: Recommended Detailing Practice

Plate Depth >= 0.6•D	0.6 • 458 = 274.8 mm	360 mm	OK
t_w<= 0.5•F	10.0 mm		OK
t_w<= 0.5•F	10.0 mm		OK

Check 2: Supported beam - Bolt Group

i) Bolts in Shear

ß=(6•z) / (n_1.(n_1+1)•p1)	(6•50) / (5 • (5 + 1)• 70)	0.143	
$F_{v,Rd}=\alpha_v \cdot f_{ub} \cdot A / \gamma_{M2}$	0.6 • 800 • 245.0 / 1.25	94.1 kN	
$V_{Rd}=n \cdot F_{v.Rd} / \sqrt{((1+a \cdot n)^2+(ß \cdot n)^2)}$	(5 • 94.08) / $\sqrt{((1+0.000 \cdot 5)^2 + (0.143 \cdot 5)^2)}$	382.8 kN	OK

ii) Fin plate bearing

Vert P_1, e_1, P_2, e_2, α_b, k_1	70.0, 40.0, 0.0, 50.0, 0.606, 2.500		
$F_{b,Rd}=k_1 \cdot \alpha_b \cdot f_{up} \cdot d \cdot t_p / \gamma_{M2}$	2.5 • 0.606 • 410 • 20 • 10.0 / 1.25	99.4 kN	
Horz P_1, e_1, P_2, e_2, α_b, k_1	0.0, 50.0, 70.0, 40.0, 0.758, 2.500		
$F_{b,Rd}=k_1 \cdot \alpha_b \cdot f_{up} \cdot d \cdot t_p / \gamma_{M2}$	2.5 • 0.758 • 410 • 20 • 10.0 / 1.25	124.2 kN	
$V_{.Rd}=N / \sqrt{(((1+a \cdot N) / F_{b.vert.Rd})^2}$	5.00 / $\sqrt{(((1 + 0.00 \cdot 5.00) / 99.39)^2}$		
$+(ß \cdot N / F_{b.hor.Rd})^2)$	+ (0.14 • 5.00) / 124.24)²)	431.5 kN	OK

iii) Beam Web bearing

Vert P_1, e_1, P_2, e_2, α_b, k_1	70.0, 40.0, 0.0, 40.0, 0.606, 2.500		
$F_{b,Rd}=k_1 \cdot \alpha_b \cdot f_{ub} \cdot d \cdot t_p / \gamma_{M2}$	2.5 • 0.606 • 410 • 20 • 9.0 / 1.25	89.5 kN	
Horz P_1, e_1, P_2, e_2, α_b, k_1	0.0, 40.0, 70.0, 40.0, 0.606, 2.500		
$F_{b,Rd}=k_1 \cdot \alpha_b \cdot f_{ub} \cdot d \cdot t_p / \gamma_{M2}$	2.5 • 0.606 • 410 • 20 • 9.0 / 1.25	89.5 kN	
$V_{.Rd}=N / \sqrt{(((1+a \cdot N) / F_{b.vert.Rd})^2}$	5.00 / $\sqrt{(((1 + 0.00 \cdot 5.00) / 89.45)^2}$		
$+(ß \cdot N / F_{b.hor.Rd})^2)$	+ (0.14 • 5.00) / 89.45)²)	364.0 kN	OK

Check 3:Supported Beam - Connecting Elements

i) Shear

$V_{Rd.g}=(h_p \cdot t_p / 1.27) \cdot (f_{yp} / \sqrt{3} / \gamma_{M0})$	(360•10/1.27) • (275/√3/1.0)	450.1 kN	OK
$V_{Rd.n}=A_{v.Net} \cdot f_{up} / \sqrt{3} / \gamma_{M2net}$	2500 • 410/√3/1.1	538.0 kN	OK
$V_{Rd.b}=(0.5 \cdot f_{up} \cdot A_{nt} / \gamma_{M2net})$	(0.5 • 410 • 390 / 1.1)		
$+(F_{yp} \cdot A_{nv} / \sqrt{3} / \gamma_{M0})$	+ (275 • 2210 / √3/1.0)	423.6 kN	OK

ii) Bending

$V_{Rd}=8$	H_p >= 2.73•z	n.a.	OK

iii) Lateral torsional buckling

$V_{Rd}=(W_{el.P} / z) \cdot (F_{yP} / \gamma_{M0})$	(216000 / 50) • (275 / 1.0)	1188.0 kN	OK

Check 4: Supported Beam - Resistance at the connection

i) Shear

$V_{Rd.G}=A_{v.wb} \cdot f_{y.b1} / \sqrt{3} / \gamma_{M0}$	3892.50 • 275.00/√3/1.0	618.0 kN	OK
$V_{Rd.N}=A_{v.wb.net} \cdot f_{u.b1} / \sqrt{3} / \gamma_{M2}$	2902.50 • 410.00/ √3/1.1	624.6 kN	OK
$V_{Rd.B}=(0.5 \cdot f_{u.b1} \cdot A_{nv} / \gamma_{M2})$	((0.5 • 410.00 • 261.00) / 1.1)		
$+ (f_{y.B1} \cdot A_{nv} / \sqrt{3} / \gamma_{M0})$	+ ((275.00 • 1989.00 / (1.73 • 1.0))	364.4 kN	OK

Check 5: Supported Beam Notch Resistance

$V_{Rd}=A_{v.N} \cdot f_{ybw} / (\sqrt{3} \cdot \gamma_{M0})$	3915 • 275 / (√3 • 1.0)	621.6 kN	Low Shear
$M_{v.Rd}=f_{v.b1} \cdot W_{el.N.y} / \gamma_{M0}$	275 • 401/1.0	110.4 kN.m	
$V_{Rd}=Min(V_{Rd}, M_{v.rd} / La)$	Min(621.56, 110.38 / 112)	621.6 kN	OK

Check 6: Supported Beam - Single Notched Web Stability (restrained)

D_{nt}<= h_{b1} / 2	35.0 <= 458.0/ 2 mm	35.0 <= 229.0	OK

MasterSeries Sales Team
10002
3 Castle Street
Carrickfergus
Co. Antrim BT38 7BE
Tel : 028 9036 5950

Job Ref : **1472**
Sheet : **C / 702**
Made by : **Tommy White**
Date : **04 August 2017 / Ver. 2017.08**
Checked :
Approved :

$L_n <= h_{b1}$		102 <= 458	OK

Check 7: Unrestrained Supported Beam. Overall Stability of Notched Beam

	Beam assumed to be restrained		ignored

Check 8: Supporting Member Welds

$a=0.7s >= 0.5\ t_p$	5.6 = 0.7 • 8 >= 0.5 • 10.0		OK

Check 10: Supporting Member Local Resistance

i) Combined Shear

$V_{Ed.tot}=(V_{Ed.1} / h_{p.1}+ V_{Ed.2} / h_{p.2})\bullet h_{p.min}$	(250.0 / 360 + 120.0 / 360) • 360	370.0 kN	
$F_{Rd}=2\bullet h_{p.min}\bullet T_2\bullet f_{y.2} / (\sqrt{3}\bullet\gamma_{M0})$	2 • 360 • 9.6 • 275/(√3 • 1.0)	1097.4 kN	OK

Tie Forces

Applied Tie Force	250.0 kN		

Check 11: Structural integrity - Fin Plate

i) Tension

Part Block Tension	Only 1 Shear Plane		
$F_{Rd.b}=f_{u.p}\bullet A_{nt}/ \gamma_{Mu}$	410 • 2210 / 1.1		
$+ f_{y.p}\bullet A_{nv} / \sqrt{3} / \gamma_{M0}$	+ 275 • 390 / 1.73 • 1.0	885.6 kN	OK
Full Block Tension	Only 2 Shear Planes		
$F_{Rd.b}=f_{u.p}\bullet A_{nt}/ \gamma_{Mu}$	410 • 1920 / 1.1		
$+ f_{y.p}\bullet A_{nv} / \sqrt{3} / \gamma_{M0}$	+ 275 • 780 / 1.73 • 1.0	839.5 kN	OK
Full Depth Tension	No Shear Planes		
$F_{Rd.n}=0.9\bullet F_{u.p}\bullet A_{net.p} / \gamma_{Mu}$	0.9 • 410 • 2500 / 1.1	838.6 kN	OK

ii) Shear

$F_{v,Rd}=\alpha_v\bullet f_{ub}\bullet A / \gamma_{Mu}$	0.6 • 800 • 245.0 / 1.1	106.9 kN	
$F_{Rd}=n\bullet F_{v,Rd}$	5 • 106.9	534.5 kN	OK

iii) Bearing

$P_1,\ e_1,\ P_2,\ e_2,\ \alpha_b,\ k_1$	0.0, 50.0, 70.0, 40.0, 0.758, 2.500		
$F_{b,Rd}=k_1\bullet \alpha_b\bullet f_{up}\bullet d\bullet t_p/ \gamma_{Mu}$	2.5 • 0.758 • 410 • 20 • 10.0 / 1.1	141.2 kN	
$F_{Rd}=n\bullet F_{b,Rd}$	5 • 141.2	705.9 kN	OK

Check 12: Structural integrity - Supported Beam

i) Tension

Part Block Tension	Only 1 Shear Plane		
$F_{Rd.b}=F_{u.}\bullet A_{nt}/ \gamma_{Mu}$	410 • 1989 / 1.1		
$+ F_{y.B1}\bullet A_{nv} / \sqrt{3} / \gamma_{M0}$	+ 275 • 261 / 1.73 • 1.0	782.8 kN	OK
Full Block Tension	Only 2 Shear Planes		
$F_{Rd.b}=F_{u.}\bullet A_{nt}/ \gamma_{Mu}$	410 • 1728 / 1.1		
$+ F_{y.B1}\bullet A_{nv} / \sqrt{3} / \gamma_{M0}$	+ 275 • 522 / 1.73 • 1.0	727.0 kN	OK
Full Depth Tension	No Shear Planes		
$F_{Rd.n}=0.9\bullet F_{u.p}\bullet A_{net.p} / \gamma_{Mu}$	0.9 • 410 • 2817 / 1.1	945.0 kN	OK

ii) Bearing

$P_1,\ e_1,\ P_2,\ e_2,\ \alpha_b,\ k_1$	0.0, 40.0, 70.0, 40.0, 0.606, 2.500		
$F_{b,Rd}=k_1\bullet \alpha_b\bullet f_{ub}\bullet d\bullet t_p/ \gamma_{Mu}$	2.5 • 0.606 • 410 • 20 • 9.0 / 1.1	101.7 kN	
$F_{Rd}=n\bullet F_{b,Rd}$	5 • 101.7	508.3 kN	OK

Right Hand Beam

Check 1: Recommended Detailing Practice

Plate Depth >= 0.6•D	0.6 • 467.2 = 280.3 mm	360 mm	OK
$t_w <= 0.5\bullet F$	10.0 mm		OK
$t_w <= 0.5\bullet F$	10.0 mm		OK

Check 2: Supported beam - Bolt Group

i) Bolts in Shear

$I=n_1\bullet p_2{}^2/2+n_1\bullet(n_1{}^2-1)\bullet p_1{}^2/6$	$8\bullet 40^2/2 + 8\bullet(8^2-1)\bullet 40^2/6$	140800	
$a=z\bullet p_2/2/I$	70•40/2/140800	0.010	
$ß=z\bullet p_1/2/I\bullet(n_1-1)$	70•40/2/140800• (8-1)	0.070	
$F_{v,Rd}=\alpha_v\bullet f_{ub}\bullet A / \gamma_{M2}$	0.6 • 800 • 245.0 / 1.25	94.1 kN	
$V_{Rd}=n\bullet F_{v,Rd}/ \sqrt{((1+a\bullet n)^2+(ß\bullet n)^2)}$	$(8 \bullet 94.08) / \sqrt{((1+0.010\bullet 8)^2 + (0.070\bullet 8)^2)}$	619.6 kN	OK

MasterSeries Sales Team
3 Castle Street
Carrickfergus
Co. Antrim BT38 7BE
Tel : 028 9036 5950

10002

Job Ref : 1472
Sheet : C / 703
Made by : Tommy White
Date : 04 August 2017 / Ver. 2017.08
Checked :
Approved :

ii) Fin plate bearing

Vert P_1, e_1, P_2, e_2, α_b, k_1	40.0, 40.0, 40.0, 40.0, 0.356, 0.845		
$F_{b,Rd}=k_1 \cdot \alpha_b \cdot f_{up} \cdot d \cdot t_p / \gamma_{M2}$	0.8 • 0.356 • 410 • 20 • 10.0 / 1.25	19.7 kN	
Horz P_1, e_1, P_2, e_2, α_b, k_1	40.0, 40.0, 40.0, 40.0, 0.356, 0.845		
$F_{b,Rd}=k_1 \cdot \alpha_b \cdot f_{up} \cdot d \cdot t_p / \gamma_{M2}$	0.8 • 0.356 • 410 • 20 • 10.0 / 1.25	19.7 kN	
$V_{.Rd}=N / \sqrt{(}$ $((1+a \cdot N) / F_{b.vert.Rd})^2$	8.00 / √(((1 + 0.01 • 8.00) / 19.75)²		
$+(ß \cdot N / F_{b.hor.Rd})^2)$	+ (0.07 • 8.00) / 19.75)²)	130.1 kN	OK

iii) Beam Web bearing

Vert P_1, e_1, P_2, e_2, α_b, k_1	40.0, 40.0, 40.0, 40.0, 0.356, 0.845		
$F_{b,Rd}=k_1 \cdot \alpha_b \cdot f_{ub} \cdot d \cdot t_p / \gamma_{M2}$	0.8 • 0.356 • 410 • 20 • 11.4 / 1.25	22.5 kN	
Horz P_1, e_1, P_2, e_2, α_b, k_1	40.0, 40.0, 40.0, 40.0, 0.356, 0.845		
$F_{b,Rd}=k_1 \cdot \alpha_b \cdot f_{ub} \cdot d \cdot t_p / \gamma_{M2}$	0.8 • 0.356 • 410 • 20 • 11.4 / 1.25	22.5 kN	
$V_{.Rd}=N / \sqrt{(((1+a \cdot N) / F_{b.vert.Rd})^2}$	8.00 / √(((1 + 0.01 • 8.00) / 22.51)²		
$+(ß \cdot N / F_{b.hor.Rd})^2)$	+ (0.07 • 8.00) / 22.51)²)	148.3 kN	OK

Check 3:Supported Beam - Connecting Elements

i) Shear

$V_{Rd.g}=(h_p \cdot t_p / 1.27) \cdot (f_{yp} / \sqrt{3} / \gamma_{M0})$	(360•10/1.27) • (275/√3/1.0)	450.1 kN	OK
$V_{Rd.n}=A_{v.Net} \cdot f_{up} / \sqrt{3} / \gamma_{M2net}$	1840 • 410/√3/1.1	396.0 kN	OK
$V_{Rd.b}=(0.5 \cdot f_{up} \cdot A_{nt} / \gamma_{M2net})$	(0.5 • 410 • 470 / 1.1)		
$+(F_{yp} \cdot A_{nv} / \sqrt{3} / \gamma_{M0})$	+ (275 • 1550 / √3/1.0)	333.7 kN	OK

ii) Bending

$V_{Rd}=8$	H_p >= 2.73•z	n.a.	OK

iii) Lateral torsional buckling

$V_{Rd}=(W_{el.P} / z) \cdot (F_{yP} / \gamma_{M0})$	(216000 / 70) • (275 / 1.0)	848.6 kN	OK
$V_{Rd}=(W_{el.P} / z) \cdot (\chi_{LT} \cdot F_{y.}p / (0.6 \cdot \gamma_{M1}))$	((216000 / 70) • (0.89•275 / (0.6•1.0))	1253.1 kN	OK

Check 4: Supported Beam - Resistance at the connection

i) Shear

$V_{Rd.G}=A_{v.wb} \cdot f_{y.b1} / \sqrt{3} / \gamma_{M0}$	5015.28 • 265.00/√3/1.0	767.3 kN	OK
$V_{Rd.N}=A_{v.wb.net} \cdot f_{u.b1} / \sqrt{3} / \gamma_{M2}$	3008.88 • 410.00/ √3/1.1	647.5 kN	OK
$V_{Rd.B}=(0.5 \cdot f_{u.b1} \cdot A_{..} / \gamma_{M2})$	((0.5 • 410.00 • 535.80) / 1.1)		
$+ (f_{y.B1} \cdot A_{nv} / \sqrt{3} / \gamma_{M0})$	+ ((265.00 • 1767.00 / (1.73 • 1.0))	370.2 kN	OK

ii) Shear & Bending Interaction at 2nd Line of Bolts

$M_{c.Rd}=(f_{.y}.B1) \cdot W_{el.N}) / \gamma_{M0}$	265 • 544) /1.0	144.25	
$M_{c.Ed}=V_{Ed} \cdot H_{cc2}$	((120.0 • 90.00	10.80	OK

Check 5: Supported Beam Notch Resistance

$V_{Rd}=A_{v.}N \cdot f_{ybw} / (\sqrt{3} \cdot \gamma_{M0})$	5038 • 265 / (√3 • 1.0)	770.7 kN	Low Shear
$M_{v.Rd}=f_{y.b1} \cdot W_{el.N.y} / \gamma_{M0}$	265 • 545/1.0	144.4 kN.m	
$V_{Rd}=Min(V_{Rd}, M_{v.rd} / La)$	Min(770.74, 144.44 / 112)	770.7 kN	OK

Check 6: Supported Beam - Single Notched Web Stability (restrained)

D_{nt}<= $h_{.b1}$ / 2	35.0 <= 467.2/ 2 mm	35.0 <= 233.6	OK
L_n <= h_{b1}		102 <= 467	OK

Check 7: Unrestrained Supported Beam. Overall Stability of Notched Beam

	Beam assumed to be restrained		ignored

Check 8: Supporting Member Welds

$a=0.7s >= 0.5\ t_p$	5.6 = 0.7 • 8 >= 0.5 • 10.0		OK

Tie Forces

Applied Tie Force	120.0 kN		

Check 11: Structural integrity - Fin Plate

i) Tension

Part Block Tension	Only 1 Shear Plane		
$F_{Rd.b}=f_{u.p} \cdot A_{nt} / \gamma_{M2}$	410 • 1550 / 1.1		
$+ f_{y.p} \cdot A_{nv} / \sqrt{3} / \gamma_{M0}$	+ 275 • 470 / 1.73 • 1.0	652.3 kN	OK
Full Block Tension	Only 2 Shear Planes		
$F_{Rd.b}=f_{u.p} \cdot A_{nt} / \gamma_{M2}$	410 • 1260 / 1.1		
$+ f_{y.p} \cdot A_{nv} / \sqrt{3} / \gamma_{M0}$	+ 275 • 940 / 1.73 • 1.0	618.9 kN	OK
Full Depth Tension	No Shear Planes		
$F_{Rd.n}=0.9 \cdot F_{u.p} \cdot A_{net.p} / \gamma_{Mu}$	0.9 • 410 • 1840 / 1.1	617.2 kN	OK

MasterSeries Sales Team
10002
3 Castle Street
Carrickfergus
Co. Antrim BT38 7BE
Tel : 028 9036 5950

Job Ref	**: 1472**
Sheet	**: C / 704**
Made by	**: Tommy White**
Date	**: 04 August 2017 / Ver. 2017.08**
Checked	**:**
Approved	**:**

ii) Shear

$F_{v,Rd}=\alpha_v \cdot f_{ub} \cdot A / \gamma_{Mu}$	0.6 • 800 • 245.0 / 1.1	106.9 kN	
$F_{Rd}=n \cdot F_{v,Rd}$	8 • 106.9	855.3 kN	OK

iii) Bearing

P_1, e_1, P_2, e_2, α_b, k_1	40.0, 40.0, 40.0, 40.0, 0.356, 0.845		
$F_{b,Rd}=k_1 \cdot \alpha_b \cdot f_{up} \cdot d \cdot t_p / \gamma_{Mu}$	0.8 • 0.356 • 410 • 20 • 10.0 / 1.1	22.4 kN	
$F_{Rd}=n \cdot F_{b,Rd}$	8 • 22.4	179.5 kN	OK

Check 12: Structural integrity - Supported Beam

i) Tension

Part Block Tension	Only 1 Shear Plane		
$F_{Rd.b}=F_{u.} \cdot A_{nt} / \gamma_{Mu}$	410 • 1767 / 1.1		
$+ F_{y.B1} \cdot A_{nv} / \sqrt{3} / \gamma_{M0}$	+ 265 • 536 / 1.73 • 1.0	740.6 kN	OK
Full Block Tension	Only 2 Shear Planes		
$F_{Rd.b}=F_{u.} \cdot A_{nt} / \gamma_{Mu}$	410 • 1436 / 1.1		
$+ F_{y.B1} \cdot A_{nv} / \sqrt{3} / \gamma_{M0}$	+ 265 • 1072 / 1.73 • 1.0	699.3 kN	OK
Full Depth Tension	No Shear Planes		
$F_{Rd.n}=0.9 \cdot F_{u.p} \cdot A_{net.p} / \gamma_{Mu}$	0.9 • 410 • 2921 / 1.1	979.8 kN	OK

ii) Bearing

P_1, e_1, P_2, e_2, α_b, k_1	40.0, 40.0, 40.0, 40.0, 0.356, 0.845		
$F_{b,Rd}=k_1 \cdot \alpha_b \cdot f_{ub} \cdot d \cdot t_p / \gamma_{Mu}$	0.8 • 0.356 • 410 • 20 • 11.4 / 1.1	25.6 kN	
$F_{Rd}=n \cdot F_{b,Rd}$	8 • 25.6	204.7 kN	OK

MasterSeries Sales Team
3 Castle Street
Carrickfergus
Co. Antrim BT38 7BE
Tel : 028 9036 5950

10002

Job Ref	**: 1472**
Sheet	**: C / 706**
Made by	**: Tommy White**
Date	**: 04 August 2017 / Ver. 2017.08**
Checked	**:**
Approved	**:**

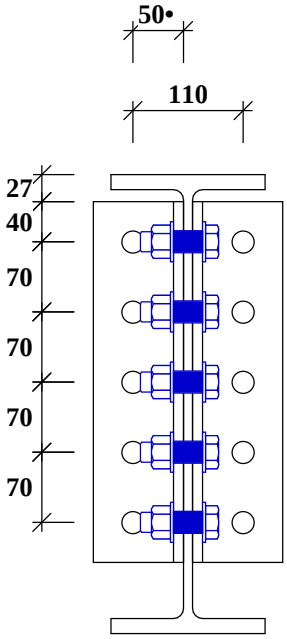

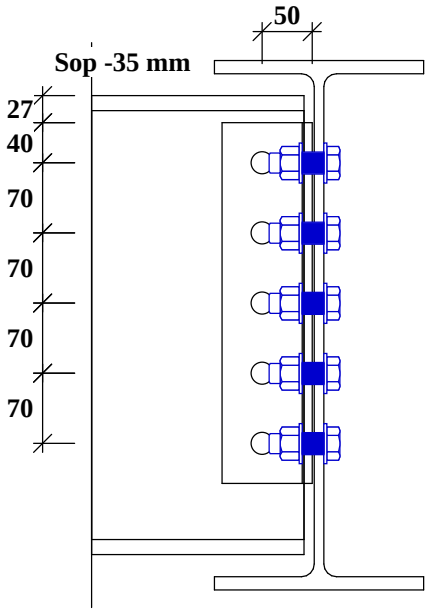

Left: 457x152 UB 67 [S275]
2 No. 90 x 90 x 10 L x 360 mm (2x5 kg)
With 5 No. 22 mm holes in webs
and 5 No. 22 mm holes in toes
For 15 No. 20 mm Ø Grade 8.8 Bolts.

Beam: 533x210 UB 82 [S275]
Beam to web gap 10 mm
Web to cleat gap 2 mm
Cleats grade: S 275

Beam to Beam Angle Cleats
Beam to Beam Angle Cleat Connection to EC 3 (UK NAD)
Basic Data

User Defined Applied Forces at Interface

Shear Forces	Left = 200.0 kN, Right = 0.0 kN
Tie Force	75.0 kN
Design to	EC 3: Part 1-8: 2005 Design of Joints
SCI Green Book	P358: Joints in steel construction: Simple joints to Eurocode 3

Basic Dimensions

Left-457x152UB67 [28]	D=458.0, B=153.8, T=15.0, t=9.0, r=10.2, py=275
Supporting-533x210UB82 [28]	D=528.3, B=208.8, T=13.2, t=9.6, r=12.7, py=275
Bolts 20 mm Ø in 22 mm holes	Grade 8.8 Bolts
Plates S 275	All weld grades provided to suit minimum connected steel grade
Cleat Annotation	(Web) - Area of Cleats adjacent to supported beam web (like a fin-plate)
	(Toe) - Area of Cleats Perpendicular to supported beam web (like an end-plate)

Summary of Results (Unity Ratios)

Left Hand Beam

Checks 8 & 9 Bearing & Shear (Toes)	752.6, 589.1, 752.6, 1076.0, 914.2 >= 200.0kN	0.34	OK
Check 10 Shear (Toes)	617.3, 609.4 >= 100.0kN	0.16	OK
Tie checks	0.58, 0.39, 0.58, 0.52	0.58	OK
Check 2: Bolt Shear & Bearing (web)	0.26, 0.25, 0.46	0.46	OK
Check 3: Sup.Beam Connect Elmts. (web)	0.22, 0.19, 0.25, 0.08	0.25	OK
Check 4: Shear & Bending (web)	0.29, 0.27, 0.21	0.29	OK

MasterSeries Sales Team
3 Castle Street
Carrickfergus
Co. Antrim BT38 7BE
Tel : 028 9036 5950

10002

Job Ref	**: 1472**
Sheet	**: C / 707**
Made by	**: Tommy White**
Date	**: 04 August 2017 / Ver. 2017.08**
Checked	**:**
Approved	**:**

Left Hand Beam

Check 8a: Bolt Shear (Toes)

$F_{v,Rd}=\alpha_v \cdot f_{ub} \cdot A / \gamma_{M2}$	0.6 • 800 • 245.0 / 1.25	94.1 kN	
$V_{Rd1}=0.8 \cdot n \cdot F_{v,Rd} \cdot cols$	0.8 • 5 • 94.1 • 2	752.6 kN	OK

Check 8b: End-Plate Bearing (Toes)

P_1, e_1, P_2, e_2, α_b, k_1	70.0, 40.0, 50.0, 39.5, 0.606, 1.482		
$F_{b,Rd}=k_1 \cdot \alpha_b \cdot f_{up} \cdot d \cdot t_p / \gamma_{M2}$	1.5 • 0.606 • 410 • 20 • 10.0 / 1.25	58.9 kN	
$F_{b,Rd} <= 0.80 \cdot F_{v,Rd}$			
$F_{Rd}=n \cdot f_{b,Rd} \cdot rows$	5 • 58.9 • 2	589.1 kN	OK

Check 8c: Supporting Beam Web Bearing (Toes)

$\alpha_b=Min(p_1/d_0/3-¼, f_{ub}/f_u, 1)$	Min(70/22/3-¼, 800/410, 1) » Min(0.811, 1.951, 1)	0.811	
$k_{1.inn}=min(2.5, 1.4 \cdot p_2/d_0-1.7)$	min(2.5, 1.4 • 50/22 - 1.7 » Min(2.5, 1.5)	1.482	
$F_{b,Rd}=k_1 \cdot \alpha_b \cdot f_{u,2} \cdot d \cdot t_p / \gamma_{M2}$	1.5 • 0.811 • 410 • 20.0 • 9.6 / 1.25	75.6 kN	
$0.80 \cdot F_{v,Rd} < F_{b,Rd}$			
$F_{Rd}=0.80 \cdot n \cdot f_{v,Rd} \cdot rows$	0.80 • 5 • 94.1 • 2	752.6 kN	OK

Check 9a: End-Plate Plane Shear (Toes)

$V_{Rd4}=2 \cdot h_p \cdot t_p \cdot F_{yp}/(1.27 \cdot \sqrt{3} \cdot \gamma_{M0})$	2•360 • 10 • 275/(1.27 • √3 • 1.0)	900.1 kN	OK
$V_{Rd}=2 \cdot t_p \cdot (h_p-n_1 \cdot d_0) \cdot F_{up}/(\sqrt{3} \cdot \gamma_{M2})$	2•10•(360 - 5 • 22) • 410/(√3 • 1.1)	1076.0 kN	OK

Check 9b: End-Plate Block Shear (Toes)

A_{nv}, $A_{nt}=Fn(t_p, h_p, e_1, e_2, n_1, d_0)$	(10, 360, 40, 40, 5, 22)	2210, 285 mm²	
$V_{Rd}=2 \cdot (F_{up} \cdot A_{nt}/\gamma_{M2}+f_{yp} \cdot A_{nv}/(\sqrt{3} \cdot \gamma_{M0}))$	2•(410 • 285 / 1.1 + 2752210 • /(√3 • 1.0)	914.2 kN	OK

Check 10: Supporting Member - Local Resistance (Toes)

A_v, $A_{Vnet}=Fn(e_t, e_b, p_1, n, dia, T)$	fn(100, 25, 70, 5, 22.0, 9.6)	3888, 2832 mm²	
$V_{Rd}=A_v \cdot F_{yp}/(\sqrt{3} \cdot \gamma_{M0})$	3888 • 275/(√3 • 1.0)	617.3 kN	OK
$V_{Rd}=A_{vnet} \cdot F_{up}/(\sqrt{3} \cdot \gamma_{M2})$	2832 • 410/(√3 • 1.1)	609.4 kN	OK

Tie force Checks

Basic Data	Tie force = 200.0 kN		
Tie Force	Tie forces are analysed independently of any vertical loads.		
EC3 Design	Using conservative SCI P212 method to BS 5950		
New Tie force	Magnified by 1.2 for lower EC3 load Factors	240.0 kN	
Cleat toe Le=e1+e2+(n-1)•pe-n•d'	40 + 40 + (5-1) x 70 - 5 x 22.0	249.0 mm	
Cleat Ten cap =0.60•Le•t•py	0.60 x 249.0 x 10 x 275	410.9 kN	OK
Beam Web Le=e1+e2+(n-1)•pe-n•d'	40 + 40 + (5-1) x 70 - 5 x 22.0	250.0 mm	
Web Ten cap=Le•t•py	250.0 x 9 x 275	618.8 kN	OK
Web Bear cap=Fn(t, Pbg, e, n, Ø, kbs)	9.0, 460, 40, 5, 20, 1.00	414.0 kN	OK
Cleat Bear cap=Fn(t, Pbg, e, n, Ø, kbs)	10.0, 460, 40, 5, 20, 1.00	460.0 kN	OK
Prying Ratio Pr=(l1+2•tk) / (2•tk)	(9 + 2 x 10) / (2 x 10)	1.46	
Bolt Cap=Us•Anet/(1.25•Pr)•bolts	785 x 245/(1.25 x 1.46) x 10	1056.0 kN	OK

Check 2: Supported beam - Bolt Group (web)

i) Bolts in Shear

$ß=(6 \cdot z) / (n_1 \cdot (n_1+1) \cdot p1)$	(6•50) / (5 • (5 + 1)• 70)	0.143	
$F_{v,Rd}=\alpha_v \cdot f_{ub} \cdot A / \gamma_{M2}$	0.6 • 800 • 245.0 / 1.25	94.1 kN	
$V_{Rd}=2 \cdot n \cdot F_{v.Rd}/\sqrt{((1+a \cdot n)^2+(ß \cdot n)^2)}$	(2•5 • 94.08) / √((1+0.000•5)² + (0.143•5)²)	765.6 kN	OK

ii) Fin plate bearing

Vert P_1, e_1, P_2, e_2, α_b, k_1	70.0, 40.0, 0.0, 40.0, 0.606, 2.500		
$F_{b,Rd}=k_1 \cdot \alpha_b \cdot f_{up} \cdot d \cdot t_p / \gamma_{M2}$	2.5 • 0.606 • 410 • 20 • 10.0 / 1.25	99.4 kN	
Horz P_1, e_1, P_2, e_2, α_b, k_1	0.0, 40.0, 70.0, 40.0, 0.606, 2.500		
$F_{b,Rd}=k_1 \cdot \alpha_b \cdot f_{up} \cdot d \cdot t_p / \gamma_{M2}$	2.5 • 0.606 • 410 • 20 • 10.0 / 1.25	99.4 kN	
$V_{.Rd}=2 \cdot N / \sqrt{((1+a \cdot N) / F_{b.vert.Rd})^2 + (ß \cdot N / F_{b.hor.Rd})^2}$	2•5.00 / √(((1 + 0.00 • 5.00) / 99.39)² + (0.14 • 5.00) / 99.39)²)	808.8 kN	OK

iii) Beam Web bearing

Vert P_1, e_1, P_2, e_2, α_b, k_1	70.0, 67.0, 0.0, 40.0, 0.811, 2.500		
$F_{b,Rd}=k_1 \cdot \alpha_b \cdot f_{ub} \cdot d \cdot t_p / \gamma_{M2}$	2.5 • 0.811 • 410 • 20 • 9.0 / 1.25	119.6 kN	
Horz P_1, e_1, P_2, e_2, α_b, k_1	0.0, 40.0, 70.0, 67.0, 0.606, 2.500		
$F_{b,Rd}=k_1 \cdot \alpha_b \cdot f_{ub} \cdot d \cdot t_p / \gamma_{M2}$	2.5 • 0.606 • 410 • 20 • 9.0 / 1.25	89.5 kN	
$V_{.Rd}=N / \sqrt{(((1+a \cdot N) / F_{b.vert.Rd})^2}$	5.00 / √(((1 + 0.00 • 5.00) / 119.65)²		

MasterSeries Sales Team
3 Castle Street
Carrickfergus
Co. Antrim BT38 7BE
Tel : 028 9036 5950

10002

Job Ref : **1472**
Sheet : **C / 708**
Made by : **Tommy White**
Date : **04 August 2017 / Ver. 2017.08**
Checked :
Approved :

$+(ß \cdot N / F_{b.hor.Rd})^2)$	$+ (0.14 \cdot 5.00) / 89.45)^2)$	432.6 kN	OK

Check 3:Supported Beam - Connecting Elements (web)

i) Shear

$V_{Rd.g}=2 \cdot (h_p \cdot t_p / 1.27) \cdot (f_{yp} / \sqrt{3} / \gamma_{M0})$	$2 \cdot (360 \cdot 10/1.27) \cdot (275/\sqrt{3}/1.0)$	900.1 kN	OK
$V_{Rd.n}=2 \cdot A_{v.Net} \cdot f_{up}/\sqrt{3}/\gamma_{M2net}$	$2 \cdot 2500 \cdot 410/\sqrt{3}/1.1$	1076.0 kN	OK
$V_{Rd.b}=2 \cdot (0.5 \cdot f_{up} \cdot A_{nt} / \gamma_{M2net})$	$2 \cdot (0.5 \cdot 410 \cdot 290 / 1.1)$		
$+2 \cdot (F_{yp} \cdot A_{nv} / \sqrt{3}/\gamma_{M0})$	$+ 2 \cdot (275 \cdot 2210 / \sqrt{3}/1.0)$	809.9 kN	OK

ii) Bending

$V_{Rd}=8$	$H_p >= 2.73 \cdot z$	n.a.	OK

iii) Lateral torsional buckling

$V_{Rd}=2 \cdot (W_{el.P} / z) \cdot (F_{yP} / \gamma_{M0})$	$2 \cdot (216000 / 50) \cdot (275 / 1.0)$	2376.0 kN	OK

Check 4: Supported Beam - Resistance at the connection (web)

i) Shear

$V_{Rd.G}=A_{v.wb} \cdot f_{y.b1} / \sqrt{3} / \gamma_{M0}$	$4382.00 \cdot 275.00/\sqrt{3}/1.0$	695.7 kN	OK
$V_{Rd.N}=A_{v.wb.net} \cdot f_{u.b1} / \sqrt{3} / \gamma_{M2}$	$3392.00 \cdot 410.00/ \sqrt{3}/1.1$	729.9 kN	OK

iii) Shear & Bending Interaction of the Beam Web

data $V_{AB.Rd}$, $V_{BC.Rd}$, $V_{BC.Ed}$	57, 400.10, 122.27		
$M_{c.BC.Rd}=f_y \cdot t_w/6/\gamma_{M0} \cdot ((n_1-1) \cdot p_1)^2$	$(275.00 \cdot 9.00 / 6 / 1.0) \cdot (5-1) \cdot 70)^2$	32.3 kN.m	
$M_{c.Ed}=V_{ed} \cdot Z_p$	$200.00 \cdot 50.00$	10.00 kN.m	
$M_{c.Rd}=M_{c.BC.Rd}+V_{AB.Rd} \cdot (n_1-1) \cdot p_1$	$32.34 + 57.16 \cdot (5-1) \cdot 70$	48.34 kN.m	OK

MasterSeries Sales Team
3 Castle Street
Carrickfergus
Co. Antrim BT38 7BE
Tel : 028 9036 5950

10002

Job Ref	: 1472
Sheet	: C / 710
Made by	: Tommy White
Date	: 04 August 2017 / Ver. 2017.08
Checked	:
Approved	:

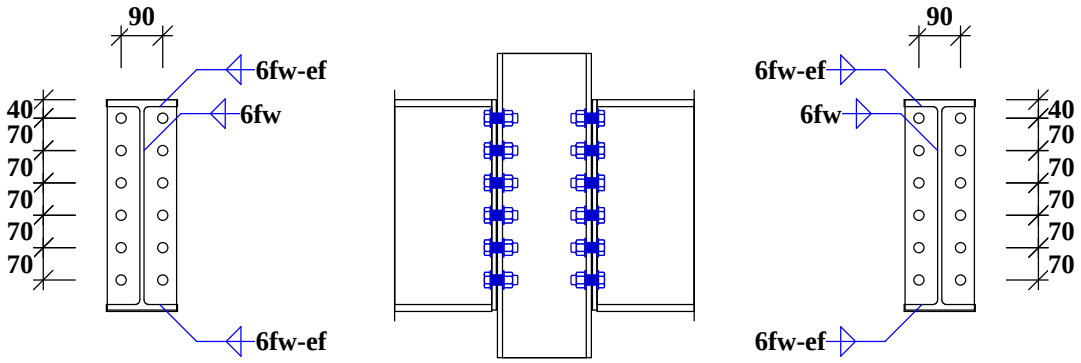

Beam 1: 457x152 UB 67 [S275]
Plate: 10 x 150 x 455 mm dp. (5 kg)
With 12 No. 22 mm holes
For 20 mm Ø Grade 8.8 Bolts.

Column: 203x203 UC 46 [S 275]
End-Plates S 275

Beam 2: 457x152 UB 67 [S275]
Plate: 10 x 150 x 455 mm dp. (5 kg)
With 12 No. 22 mm holes
For 20 mm Ø Grade 8.8 Bolts.

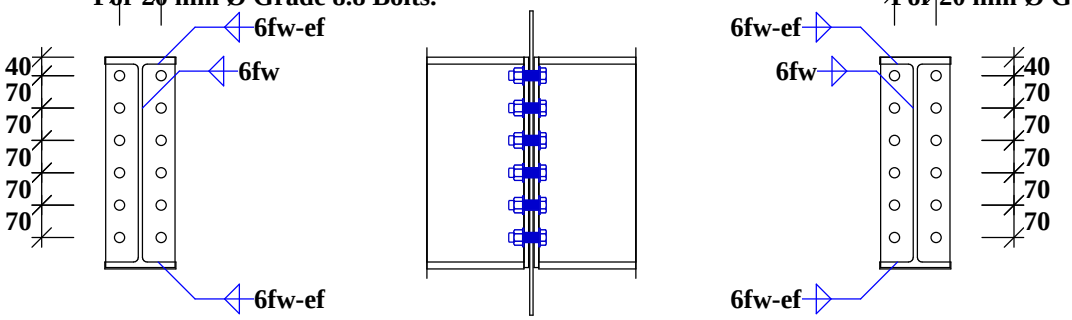

Beam 1: 457x152 UB 67 [S275]
Plate: 10 x 150 x 455 mm dp. (5 kg)
With 12 No. 22 mm holes
For 20 mm Ø Grade 8.8 Bolts.

Beam 2: 457x152 UB 67 [S275]
Plate: 10 x 150 x 455 mm dp. (5 kg)
With 12 No. 22 mm holes
For 20 mm Ø Grade 8.8 Bolts.

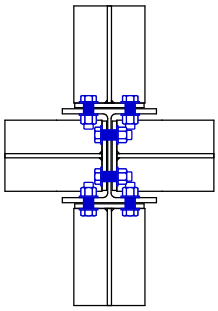

MasterSeries Sales Team
3 Castle Street
Carrickfergus
Co. Antrim BT38 7BE
Tel : 028 9036 5950

10002

Job Ref	**: 1472**
Sheet	**: C / 711**
Made by	**: Tommy White**
Date	**: 04 August 2017 / Ver. 2017.08**
Checked	**:**
Approved	**:**

Beam to Column Flexible End-Plate
Beam to Column Flexible End-plate Connection to EC 3 (UK NAD)
Basic Data

User Defined Applied Forces at Interface

Shear Forces	Flange 1 = 375.0 kN, Web 1 = 275.0 kN
	Flange 2 = 375.0 kN, Web 2 = 375.0 kN
Tie Forces	Flanges = 75.0 kN, Webs = 75.0 kN
Design to	EC 3: Part 1-8: 2005 Design of Joints
SCI Green Book	P358: Joints in steel construction: Simple joints to Eurocode 3

Basic Dimensions

Flange 1-457x152UB67 [28]	D=458.0, B=153.8, T=15.0, t=9.0, r=10.2, py=275
Flange 2-457x152UB67 [28]	D=458.0, B=153.8, T=15.0, t=9.0, r=10.2, py=275
Web 1-457x152UB67 [28]	D=458.0, B=153.8, T=15.0, t=9.0, r=10.2, py=275
Web 2-457x152UB67 [28]	D=458.0, B=153.8, T=15.0, t=9.0, r=10.2, py=275
Column -203x203UC46 [28]	D=203.2, B=203.6, T=11.0, t=7.2, r=10.2, py=275
Bolts 20 mm Ø in 22 mm holes	Grade 8.8 Bolts
Plates S 275	All weld grades provided to suit minimum connected steel grade

Summary of Results (Unity Ratios)

Checks for Flange Beams 1 & 2

Check 4 Supported Beam Web Shear	695.7 >= 375.0kN	0.54	OK
Checks 1 & 2 Detailing Practice	1.00, 0.83, 1.00, 0.64, 0.56, 0.710.86	1.00	OK
Check 8 Bearing	903.2, 903.2, 903.2 >= 375.0kN	0.42	OK
Check 10 Shear	864.5, 859.3 >= 187.5kN	0.22	OK
Check 11-14 Tie Forces	751.1, 1041.9, 1924.4, 919.8, 1236.1, 1435.7, 602.3 >= 375.0kN	0.62	OK

Checks for Web Beams 1 & 2

Check 4 Supported Beam Web Shear	695.7 >= 375.0kN	0.54	OK
Checks 1 & 2 Detailing Practice	1.00, 0.83, 1.00, 0.64, 0.56, 0.710.86	1.00	OK
Check 8 Bearing	903.2, 903.2, 903.2 >= 375.0kN	0.42	OK
Check 10 Shear	565.9, 562.4 >= 325.0kN	0.58	OK
Check 10 Combined Bearing	95.7 >= 54.2kN	0.57	OK
Check 14 Tie Forces Col Web	236.2 >= 100.0kN	0.42	OK
Check 11-13 Tie Forces	751.1, 1041.9, 1924.4, 1435.7, 602.3 >= 375.0kN	0.62	OK

Checks for Flange Beams 1 & 2 as Full Depth End-Plate

Check 1: Recommended Detailing Practice

Plate Depth >= 0.6•D	0.6 • 458 = 274.8 mm	455 mm	OK
$10 >= t_p <= 12$	10.0 mm		OK
$90 <= p_3 <= 140$	90 mm		OK
$t_p <= d/1.9 \cdot \sqrt{(f_{ub}/ f.y)}$	$20/1.9 \cdot \sqrt{(800 / 275)}$	18 mm	OK

Check 4: Supported Beam Web Shear

$A_v=A-t_b \cdot B_b-t_t \cdot B_t+(t_w+2 \cdot r) \cdot T$	8555 - 153.8•15.0 - 153.8•15.0 + (9.0+2•10.2)•15.0	4382 mm²	
$V_{pl_{Rd}}=Av \cdot f_{ybw} / (\sqrt{3} \cdot \gamma_{M0})$	4382 • 275 / (√3 • 1.0)	695.7 kN	OK

Check 2: Supported Beam Welds

$a=0.4\ t_{wb1}$	0.4 • 9.0	3.6 mm	
$a_1=a \cdot V_{Ed}/ V_{pl,Rd} \cdot 1.27$	3.6 • 375.0 / 695.7 • 1.27 (SCI AD370)	2.5 mm	
$S_{min}=\max(3, \min(a, a_1)) / 0.7$		4.3 mm	OK

Check 8a: Bolt Shear

$F_{v,Rd}=\alpha_v \cdot f_{ub} \cdot A / \gamma_{M2}$	0.6 • 800 • 245.0 / 1.25	94.1 kN	
$V_{Rd1}=0.8 \cdot n \cdot F_{v,Rd} \cdot cols$	0.8 • 6 • 94.1 • 2	903.2 kN	OK

Check 8b: End-Plate Bearing

P_1, e_1, P_2, e_2, α_b, k_1	70.0, 40.0, 90.0, 30.0, 0.811, 2.118		
$F_{b,Rd}=k_1 \cdot \alpha_b \cdot f_{up} \cdot d \cdot t_p / \gamma_{M2}$	2.1 • 0.811 • 410 • 20 • 10.0 / 1.25	112.6 kN	
$0.80 \cdot F_{v,Rd} < F_{b,Rd}$			
$F_{Rd}=0.80 \cdot n \cdot f_{v,Rd \cdot rows}$	0.80 • 6 • 94.1 • 2	903.2 kN	OK

MasterSeries Sales Team
10002
3 Castle Street
Carrickfergus
Co. Antrim BT38 7BE
Tel : 028 9036 5950

Job Ref : **1472**
Sheet : **C / 712**
Made by : **Tommy White**
Date : **04 August 2017 / Ver. 2017.08**
Checked :
Approved :

Check 8c: Supporting Column Flange Bearing

α_b=Min($p_1/d_0/3-¼$, f_{ub}/f_u, 1)	Min(70/22/3-¼, 800/410, 1) » Min(0.811, 1.951, 1)	0.811	
$k_{1,inn}$=min(2.5, 1.4•p_2/d_0-1.7)	min(2.5, 1.4 • 90/22 - 1.7 » Min(2.5, 4.0)	2.500	
$F_{b,Rd}=k_1 \cdot \alpha_b \cdot f_{u,2} \cdot d \cdot t_p / \gamma_{M2}$	2.5 • 0.811 • 410 • 20.0 • 11.0 / 1.25	146.2 kN	
$0.80 \cdot F_{v,Rd} < F_{b,Rd}$			
$F_{Rd}=0.80 \cdot n \cdot f_{v,Rd \cdot rows}$	0.80 • 6 • 94.1 • 2	903.2 kN	OK

Check 10: Supporting Member - Local Resistance

A_v, A_{Vnet}=Fn(e_t, e_b, p_1, n, dia, T)	fn(100, 45, 70, 6, 22.0, 11.0)	5445, 3993 mm²	
$V_{Rd}=A_v \cdot F_{yp}/(\sqrt{3} \cdot \gamma_{M0})$	5445 • 275/(√3 • 1.0)	864.5 kN	OK
$V_{Rd}=A_{vnet} \cdot F_{up}/(\sqrt{3} \cdot \gamma_{M2})$	3993 • 410/(√3 • 1.1)	859.3 kN	OK

Tie Forces

Applied Tie Force	375.0 kN	

Check 11: End-Plate in Bending

$L_{eff}=L_{eff \cdot t}+(n-1) \cdot p+L_{eff \cdot t}$	129.4 + (6-1) • 70 + 98.5	577.9 mm	
$M_{pl1}=0.25 \cdot L_{eff} \cdot t^2 \cdot f_{u \cdot p} / \gamma_{Mu}$	0.25 • 577.9 • 10² • 410 / 1.1	5.39 kN.m	
$F_{Rd \cdot u \cdot 1}=(8 \cdot n-2 \cdot e_w) \cdot m_{pl1}$	(8 • 30.0 - 2 • 8.3) • 5		
/ (2•m •n-e_w•(m+n))	/ (2 • 35.7 • 30.0 - 8.3 • (35.7 + 30.0))	751.1 kN	
$F_{Rd \cdot u \cdot 2}=$			
$(2 \cdot M_{pl2}+n \cdot S(k_2 \cdot f_{ub} \cdot A / \gamma_{mu}))/(m+n)$	(2•5.39 + 30.00•12•0.90•800•245/1.1)/ (35.7 + 30.0)	1041.9 kN	
$F_{rd \cdot u \cdot 3}=S \cdot k_2 \cdot F_{ub} \cdot A_s / \gamma_{Mu}$	12 • 0.90•800 • 245/1.1	1924.4 kN	
F_{Rd}=min($F_{rd \cdot u \cdot 1}$, $F_{rd \cdot u \cdot 2}$, $F_{rd \cdot u \cdot 3}$)	Min (751.11, 1041.88, 1924.36)	751.1 kN	OK
$L_{eff}=L_{eff \cdot t}+(n-1) \cdot p+L_{eff \cdot t}$	102.0 + (6-1) • 70 + 102.0	554.0 mm	
$M_{pl1,col}=0.25 \cdot L_{eff} \cdot t_f^2 \cdot f_{u.c} / \gamma_{Mu}$	0.25 • 554.0 • 11.0² • 410 / 1.1	6.25 kN.m	
$F_{Rd.u.1,col}=(8 \cdot n-2 \cdot e_w) \cdot m_{pl1}$	(8 • 41.6 - 2 • 8.3) • 6.25		
/ (2•m •n-e_w•(m+n))	/ (2 • 33.2 • 41.6 - 8.3 • (33.2 + 41.6))	919.8 kN	
$F_{Rd.u.2,col}=$			
$(2 \cdot M_{pl2}+S(k_2 \cdot f_{ub} \cdot A \cdot n / \gamma_{mu}))/(m+n)$	(2•6.25 + 12•0.90•800•245•41.55/1.1)/ (33.2 + 41.6)	1236.1 kN	
$F_{Rd,col}$ =min($F_{rd.u.1,col}$, $F_{rd.u.2,col}$)	Min (919.75, 1236.12)	919.8 kN	OK

Check 12: Beam Web Tension

$F_{Rd}=t_{bw} \cdot (D-T_t-T_b)+F_{ubw} / \gamma_{Mu}$	9.0 • (458.0 - 15.0 - 15.0) • 410 / 1.1	1435.7 kN	OK

Check 13: Welds

Web	Covered by Check 2	n/a	OK
Flange $F_{vw \cdot d}=f_u / \sqrt{3} / \beta_w / \gamma_{Mu}$	410.0 / √3 / 0.85 / 1.1	253.2 N/mm²	
$F_{rd \cdot flange}=2 \cdot F_{vw \cdot d} \cdot a \cdot (b_{b1}-2 \cdot a)$	2 • 253.2 • 4.2 • (150.0 - 2 • 4.2)	301.1 kN	OK

Checks for Web Beams 1 & 2 as Full Depth End-Plate

Check 1: Recommended Detailing Practice

Plate Depth >= 0.6•D	0.6 • 458 = 274.8 mm	455 mm	OK
10 >= t_p<= 12	10.0 mm		OK
90 <= p_3 <= 140	90 mm		OK
t_p<= d/1.9• $\sqrt{(f_{ub}/f.y)}$	20/1.9 • √(800 / 275)	18 mm	OK

Check 4: Supported Beam Web Shear

$A_v=A-t_b \cdot B_b-t_t \cdot B_t+(t_w+2 \cdot r) \cdot T$	8555 - 153.8•15.0 - 153.8•15.0 + (9.0+2•10.2)•15.0	4382 mm²	
$V_{pl_{Rd}}=Av \cdot f_{ybw} / (\sqrt{3} \cdot \gamma_{M0})$	4382 • 275 / (√3 • 1.0)	695.7 kN	OK

Check 2: Supported Beam Welds

$a=0.4\ t_{wb1}$	0.4 • 9.0	3.6 mm	
$a_1=a \cdot V_{Ed} / V_{pl \cdot Rd} \cdot 1.27$	3.6 • 375.0 / 695.7 • 1.27 (SCI AD370)	2.5 mm	
S_{min}=max(3, min(a, a_1)) / 0.7		4.3 mm	OK

Check 8a: Bolt Shear

$F_{v,Rd}=\alpha_v \cdot f_{ub} \cdot A / \gamma_{M2}$	0.6 • 800 • 245.0 / 1.25	94.1 kN	
$V_{Rd1}=0.8 \cdot n \cdot F_{v,Rd} \cdot cols$	0.8 • 6 • 94.1 • 2	903.2 kN	OK

Check 8b: End-Plate Bearing

P_1, e_1, P_2, e_2, α_b, k_1	70.0, 40.0, 90.0, 30.0, 0.811, 2.118	
$F_{b,Rd}=k_1 \cdot \alpha_b \cdot f_{up} \cdot d \cdot t_p / \gamma_{M2}$	2.1 • 0.811 • 410 • 20 • 10.0 / 1.25	112.6 kN

MasterSeries Sales Team
10002
3 Castle Street
Carrickfergus
Co. Antrim BT38 7BE
Tel : 028 9036 5950

Job Ref : **1472**
Sheet : **C / 713**
Made by : **Tommy White**
Date : **04 August 2017 / Ver. 2017.08**
Checked :
Approved :

$0.80 \cdot F_{v,Rd} < F_{b,Rd}$			
$F_{Rd}=0.80 \cdot n \cdot f_{v,Rd \cdot rows}$	0.80 • 6 • 94.1 • 2	903.2 kN	OK

Check 8c: Supporting Column Web Bearing

$\alpha_b=Min(p_1/d_0/3-¼, f_{ub}/ f_u, 1)$	Min(70/22/3-¼, 800/410, 1) » Min(0.811, 1.951, 1)	0.811	
$k_{1 \cdot inn}=min(2.5, 1.4 \cdot p_2/d_0-1.7)$	min(2.5, 1.4 • 90/22 - 1.7 » Min(2.5, 4.0)	2.500	
$F_{b,Rd}=k_1 \cdot \alpha_b \cdot f_{u,2} \cdot d \cdot t_p/ \gamma_{M2}$	2.5 • 0.811 • 410 • 20.0 • 7.2 / 1.25	95.7 kN	
$0.80 \cdot F_{v,Rd} < F_{b,Rd}$			
$F_{Rd}=0.80 \cdot n \cdot f_{v,Rd \cdot rows}$	0.80 • 6 • 94.1 • 2	903.2 kN	OK

Check 10: Supporting Member - Local Resistance

$V_{ed}=(V_{ed1}+V_{ed2})/2$	(375 + 275)/2 (per shear plane)	325.0 kN	
A_v, $A_{Vnet}=Fn(e_t, e_{\text{-}}, p_1, n, dia, T)$	fn(100, 45, 70, 6, 22.0, 7.2)	3564, 2614 mm²	
$V_{Rd}=A_v \cdot F_{yp}/(\sqrt{3} \cdot \gamma_{\cdot 0})$	3564 • 275/(√3 • 1.0)	565.9 kN	OK
$V_{Rd}=A_{vnet \cdot F_{up}}/(\sqrt{3} \cdot \gamma_{M2})$	2614 • 410/(√3 • 1.1)	562.4 kN	OK

Check 10: Combined Load Bearing on supporting web

$F_{ed}=V_{ed1}/n_1+V_{ed2}/n_2 <= F_{b,Rd}$	375.0/12 + 275.0/12	(per bolt) 54.2 kN	OK

Tie Forces

Applied Tie Force	375.0 kN

Check 11: End-Plate in Bending

$L_{eff}=L_{eff \cdot t}+(n-1) \cdot p+L_{ef' t}$	129.4 + (6-1) • 70 + 98.5	577.9 mm	
$M_{pl1}=0.25 \cdot L_{eff} \cdot t^2 \cdot f_{u \cdot p}/ \gamma_{Mu}$	0.25 • 577.9 • 10² • 410 / 1.1	5.39 kN.m	
$F_{Rd \cdot u \cdot 1}=(8 \cdot n-2 \cdot e_w) \cdot m_{pl1}$	(8 • 30.0 - 2 • 8.3) • 5		
$/ (2 \cdot m \cdot n-e_w \cdot (m+n))$	/ (2 • 35.7 • 30.0 - 8.3 • (35.7 + 30.0))	751.1 kN	
$F_{Rd \cdot u \cdot 2}=$			
$(2 \cdot M_{pl2}+n \cdot S(k_2 \cdot f_{ub} \cdot A / \gamma_{mu}))/(m+n)$	(2•5.39 + 30.00•12•0.90•800•245/1.1)/ (35.7 + 30.0)	1041.9 kN	
$F_{rd \cdot u \cdot 3}=S \cdot k_2 \cdot F_{ub} \cdot A_s/ \gamma_{Mu}$	12 • 0.90•800 • 245/1.1	1924.4 kN	
$F_{Rd}=min(F_{rd \cdot u \cdot 1}, F_{rd \cdot u \cdot 2}, F_{rd \cdot u \cdot 3})$	Min (751.11, 1041.88, 1924.36)	751.1 kN	OK

Check 12: Beam Web Tension

$F_{Rd}=t_{bw} \cdot (D-T_t-T_b)+F_{ubw} / \gamma_{Mu}$	9.0 • (458.0 - 15.0 - 15.0) • 410 / 1.1	1435.7 kN	OK

Check 13: Welds

Web	Covered by Check 2	n/a	OK
Flange $F_{vw \cdot d}=f_u / \sqrt{3}/ ß_w/ \gamma_{Mu}$	410.0 / √3 / 0.85 / 1.1	253.2 N/mm²	
$F_{rd \cdot flange}=2 \cdot F_{vw \cdot d} \cdot a \cdot (b_{b1}-2 \cdot a)$	2 • 253.2 • 4.2 • (150.0 - 2 • 4.2)	301.1 kN	OK

Check 14: Supporting Web

Web Tie Force Applied	100.0 kN		
$8 \cdot M_{pl,rd,u} \cdot (?+1.5 \cdot \sqrt{(1-ß_1)} \cdot \sqrt{(1-\gamma_1)})$	8 • 4830.55 • (1.77 + 1.5•√(1 - 0.56)•√(1 - 0.14))		
$/(1-ß_1)$	/ (1 - 0.56)	236.18 kN	OK

MasterSeries Sales Team
3 Castle Street
Carrickfergus
Co. Antrim BT38 7BE
Tel : 028 9036 5950

10002

Job Ref	: 1472
Sheet	: C / 715
Made by	: Tommy White
Date	: 04 August 2017 / Ver. 2017.08
Checked	:
Approved	:

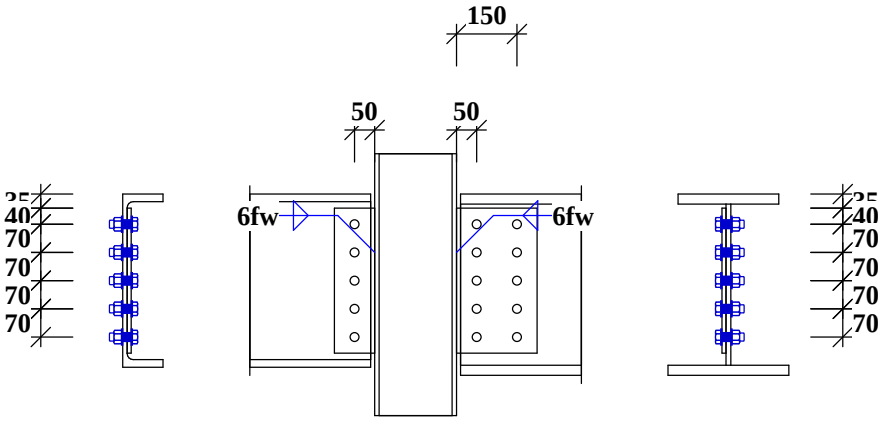

Beam 1: 430x100 PFC [S275]
Beam to Column Gap 1
Plate: 10 x 100 x 360 m
With 5 No. 22 mm holes
For 20 mm Ø Grade 8.8 Bolts.

Column: 203x203 UC 46 [S 275]
Fin-Plates S 275

Beam 2: 250x25T+300x25B+400x12WPg145.62 [S
to Column Gap 10 mm
Plate: 10 x 200 x 360 mm dp. (6 kg)
With 10 No. 22 mm holes
For 20 mm Ø Grade 8.8 Bolts.

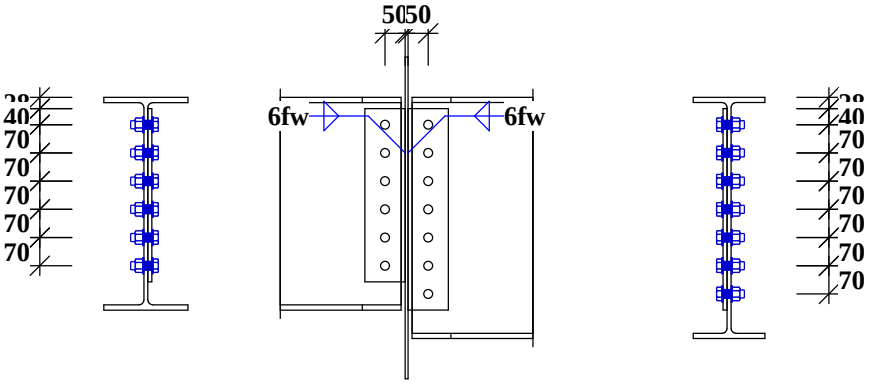

Beam 1: 533x210 UB 82 [S275]
Beam to Column Gap 10 mm
Plate: 10 x 100 x 430 mm dp. (3 kg)
With 6 No. 22 mm holes
For 20 mm Ø Grade 8.8 Bolts.

Beam 2: 610x178 UB 82 [S275]
Beam to Column Gap 10 mm
Plate: 10 x 100 x 500 mm dp. (4 kg)
With 7 No. 22 mm holes
For 20 mm Ø Grade 8.8 Bolts.

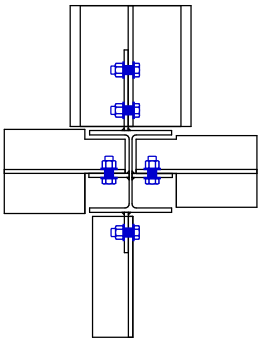

MasterSeries Sales Team
3 Castle Street
Carrickfergus
Co. Antrim BT38 7BE
Tel : 028 9036 5950

10002

Job Ref	**: 1472**
Sheet	**: C / 716**
Made by	**: Tommy White**
Date	**: 04 August 2017 / Ver. 2017.08**
Checked	**:**
Approved	**:**

Beam to Column Fin-Plate
Beam to Column Fin-plate Connection to EC 3 (UK NAD)
Basic Data

User Defined Applied Forces at Interface

Shear Forces	Flange 1 = 200.0 kN, Web 1 = 200.0 kN
	Flange 2 = 0.0 kN, Web 2 = 0.0 kN
Tie Forces	Flanges = 75.0 kN, Webs = 75.0 kN
Design to	EC 3: Part 1-8: 2005 Design of Joints
SCI Green Book	P358: Joints in steel construction: Simple joints to Eurocode 3

Basic Dimensions

Flange 1-430x100PFC [28]	D=430.0, B=100.0, T=19.0, t=11.0, r=15.0, py=265
Flange 2-250x25T+300x25B+400x12WPg145.62 [28]	
	D=450.0, B=250.0, B_2=300.0, T=25.0, t=12.0, py=265
Web 1-533x210UB82 [28]	D=528.3, B=208.8, T=13.2, t=9.6, r=12.7, py=275
Web 2-610x178UB82 [28]	D=598.6, B=177.9, T=12.8, t=10.0, r=12.7, py=275
Column -203x203UC46 [28]	D=203.2, B=203.6, T=11.0, t=7.2, r=10.2, py=275
Bolts 20 mm Ø in 22 mm holes	Grade 8.8 Bolts
Plates S 275	All weld grades provided to suit minimum connected steel grade

Summary of Results (Unity Ratios)

Checks for Flange Beam on Side 1

Check 1 Detailing Practice	1.00	1.00	OK
Check 2: Bolt Shear & Bearing	0.52, 0.46, 0.38	0.52	OK
Check 3: Sup.Beam Connect Elmts.	0.44, 0.37, 0.47, 0.17	0.47	OK
Check 4: Shear & Bending	0.25, 0.23, 0.18	0.25	OK
Check 8: Welds	1.191.19	1.19	**Warning**
Check 10: Supporting Member	0.16, 0.13	0.16	OK
Check 11: Structural integrity-Plate	0.23, 0.24, 0.24, 0.4, 0.3	0.40	OK
Check 12: Structural integrity-Beam	0.24, 0.23, 0.17, 0.3	0.30	OK

Checks for Flange Beam on Side 2

Checks for Web Beam on Side 1

Check 1 Detailing Practice	1.00	1.00	OK
Check 2: Bolt Shear & Bearing	0.42, 0.37, 0.34	0.42	OK
Check 3: Sup.Beam Connect Elmts.	0.37, 0.31, 0.40, 0.12	0.40	OK
Check 4: Shear & Bending	0.23, 0.22, 0.13	0.23	OK
Check 8: Welds	1.191.19	1.19	**Warning**
Check 10: Supporting Member	0.20, 0.14	0.20	OK
Check 11: Structural integrity-Plate	0.19, 0.20, 0.20, 0.3, 0.2	0.30	OK
Check 12: Structural integrity-Beam	0.19, 0.21, 0.16, 0.3	0.30	OK

Checks for Web Beam on Side 2

Checks for Flange Beam on Side 1

Check 1: Recommended Detailing Practice

Plate Depth >= 0.6•D	0.6 • 430 = 258 mm	360 mm	OK
t_w<= 0.5•F	10.0 mm		OK
t_w<= 0.5•F	10.0 mm		OK

Check 2: Supported beam - Bolt Group

i) Bolts in Shear

$ß=(6•z) / (n_1.(n_1+1)•p1)$	(6•50) / (5 • (5 + 1)• 70)	0.143	
$F_{v,Rd}=\alpha_v•f_{ub}•A / \gamma_{M2}$	0.6 • 800 • 245.0 / 1.25	94.1 kN	
$V_{Rd}=n•F_{v.Rd}/ \sqrt{((1+a•n)^2+(ß•n)^2)}$	(5 • 94.08) / $\sqrt{((1+0.000•5)^2 + (0.143•5)^2)}$	382.8 kN	OK

ii) Fin plate bearing

Vert P_1, e_1, P_2, e_2, α_b, k_1	70.0, 40.0, 0.0, 50.0, 0.606, 2.500	
$F_{b,Rd}=k_1• \alpha_b•f_{up}•d•t_p/ \gamma_{M2}$	2.5 • 0.606 • 410 • 20 • 10.0 / 1.25	99.4 kN
Horz P_1, e_1, P_2, e_2, α_b, k_1	0.0, 50.0, 70.0, 40.0, 0.758, 2.500	
$F_{b,Rd}=k_1• \alpha_b•f_{up}•d•t_p/ \gamma_{M2}$	2.5 • 0.758 • 410 • 20 • 10.0 / 1.25	124.2 kN

MasterSeries Sales Team
3 Castle Street
Carrickfergus
Co. Antrim BT38 7BE
Tel : 028 9036 5950

10002

Job Ref : **1472**
Sheet : **C / 717**
Made by : **Tommy White**
Date : **04 August 2017 / Ver. 2017.08**
Checked :
Approved :

$V_{.Rd}=N / \sqrt{(((1+a \cdot N) / F_{b.vert.Rd})^2 + (ß \cdot N / F_{b.hor.Rd})^2)}$	$5.00 / \sqrt{(((1 + 0.00 \cdot 5.00) / 99.39)^2 + (0.14 \cdot 5.00) / 124.24)^2)}$	431.5 kN	OK

iii) Beam Web bearing

Vert P_1, e_1, P_2, e_2, α_b, k_1	70.0, 75.0, 0.0, 40.0, 0.811, 2.500		
$F_{b,Rd}=k_1 \cdot \alpha_b \cdot f_{ub} \cdot d \cdot t_p / \gamma_{M2}$	$2.5 \cdot 0.811 \cdot 410 \cdot 20 \cdot 11.0 / 1.25$	146.2 kN	
Horz P_1, e_1, P_2, e_2, α_b, k_1	0.0, 40.0, 70.0, 75.0, 0.606, 2.500		
$F_{b,Rd}=k_1 \cdot \alpha_b \cdot f_{ub} \cdot d \cdot t_p / \gamma_{M2}$	$2.5 \cdot 0.606 \cdot 410 \cdot 20 \cdot 11.0 / 1.25$	109.3 kN	
$V_{.Rd}=N / \sqrt{(((1+a \cdot N) / F_{b.vert.Rd})^2 + (ß \cdot N / F_{b.hor.Rd})^2)}$	$5.00 / \sqrt{(((1 + 0.00 \cdot 5.00) / 146.23)^2 + (0.14 \cdot 5.00) / 109.33)^2)}$	528.7 kN	OK

Check 3:Supported Beam - Connecting Elements

i) Shear

$V_{Rd.g}=(h_p \cdot t_p / 1.27) \cdot (f_{yp} / \sqrt{3} / \gamma_{M0})$	$(360 \cdot 10/1.27) \cdot (275/\sqrt{3}/1.0)$	450.1 kN	OK
$V_{Rd.n}=A_{v.Net} \cdot f_{up} / \sqrt{3} / \gamma_{M2net}$	$2500 \cdot 410/\sqrt{3}/1.1$	538.0 kN	OK
$V_{Rd.b}=(0.5 \cdot f_{up} \cdot A_{nt} / \gamma_{M2net})$	$(0.5 \cdot 410 \cdot 390 / 1.1)$		
$+(F_{yp} \cdot A_{nv} / \sqrt{3} / \gamma_{M0})$	$+ (275 \cdot 2210 / \sqrt{3}/1.0)$	423.6 kN	OK

ii) Bending

$V_{Rd}=8$	$H_p >= 2.73 \cdot z$	n.a.	OK

iii) Lateral torsional buckling

$V_{Rd}=(W_{el.P} / z) \cdot (F_{yP} / \gamma_{M0})$	$(216000 / 50) \cdot (275 / 1.0)$	1188.0 kN	OK

Check 4: Supported Beam - Resistance at the connection

i) Shear

$V_{Rd.G}=A_{v.wb} \cdot f_{y.b1} / \sqrt{3} / \gamma_{M0}$	$5189.00 \cdot 265.00/\sqrt{3}/1.0$	793.9 kN	OK
$V_{Rd.N}=A_{v.wb.net} \cdot f_{u.b1} / \sqrt{3} / \gamma_{M2}$	$3979.00 \cdot 410.00/ \sqrt{3}/1.1$	856.3 kN	OK

iii) Shear & Bending Interaction of the Beam Web

data $V_{AB.Rd}$, $V_{BC.Rd}$, $V_{BC.Ed}$	67, 471.23, 130.23		
$M_{c.BC.Rd}=f_y \cdot t_w/6/\gamma_{M0} \cdot ((n_1-1) \cdot p_1)^2$	$(265.00 \cdot 11.00 / 6 / 1.0) \cdot (5-1) \cdot 70)^2$	38.1 kN.m	
$M_{c.Ed}=V_{ed} \cdot Z_p$	$200.00 \cdot 50.00$	10.00 kN.m	
$M_{c.Rd}=M_{c.BC.Rd}+V_{AB.Rd} \cdot (n_1-1) \cdot p_1$	$38.09 + 67.32 \cdot (5-1) \cdot 70$	56.94 kN.m	OK

Check 8: Supporting Member Welds

$a=0.7s >= 0.5\ t_p$	$4.2 = 0.7 \cdot 6 >= 0.5 \cdot 10.0$		**Warning**

Check 10: Supporting Member Local Resistance

i) Local Shear

$F_{Rd}=2 \cdot h_p \cdot t_p \cdot F_{yp} / (\sqrt{3} \cdot \gamma_{M0})$	$2 \cdot 360 \cdot 11.0 \cdot 275/(\sqrt{3} \cdot 1.0)$	1257.5 kN	OK

ii) Punching Shear

$t_{2.f}(u.2) \cdot h_p^2 / (V_{Ed} \cdot 6 \cdot z_p \cdot \gamma_{M2}) > 1$	$11.0 \cdot 410 \cdot 360^2 / (200.0 \cdot 6 \cdot 50 \cdot 1.25)$	7.793>1	OK

Tie Forces

Applied Tie Force	200.0 kN		

Check 11: Structural integrity - Fin Plate

i) Tension

Part Block Tension	Only 1 Shear Plane		
$F_{Rd.b}=f_{u.p} \cdot A_{nt} / \gamma_{M2}$	$410 \cdot 2210 / 1.1$		
$+ f_{y.p} \cdot A_{nv} / \sqrt{3} / \gamma_{M0}$	$+ 275 \cdot 390 / 1.73 \cdot 1.0$	885.6 kN	OK
Full Block Tension	Only 2 Shear Planes		
$F_{Rd.b}=f_{u.p} \cdot A_{nt} / \gamma_{M2}$	$410 \cdot 1920 / 1.1$		
$+ f_{y.p} \cdot A_{nv} / \sqrt{3} / \gamma_{M0}$	$+ 275 \cdot 780 / 1.73 \cdot 1.0$	839.5 kN	OK
Full Depth Tension	No Shear Planes		
$F_{Rd.n}=0.9 \cdot F_{u.p} \cdot A_{net.p} / \gamma_{Mu}$	$0.9 \cdot 410 \cdot 2500 / 1.1$	838.6 kN	OK

ii) Shear

$F_{v,Rd}=\alpha_v \cdot f_{ub} \cdot A / \gamma_{Mu}$	$0.6 \cdot 800 \cdot 245.0 / 1.1$	106.9 kN	
$F_{Rd}=n \cdot F_{v,Rd}$	$5 \cdot 106.9$	534.5 kN	OK

iii) Bearing

P_1, e_1, P_2, e_2, α_b, k_1	0.0, 50.0, 70.0, 40.0, 0.758, 2.500		
$F_{b,Rd}=k_1 \cdot \alpha_b \cdot f_{up} \cdot d \cdot t_p / \gamma_{Mu}$	$2.5 \cdot 0.758 \cdot 410 \cdot 20 \cdot 10.0 / 1.1$	141.2 kN	
$F_{Rd}=n \cdot F_{b,Rd}$	$5 \cdot 141.2$	705.9 kN	OK

Check 12: Structural integrity - Supported Beam

i) Tension

MasterSeries Sales Team
3 Castle Street
Carrickfergus
Co. Antrim BT38 7BE
Tel : 028 9036 5950

10002

Job Ref : **1472**
Sheet : **C / 718**
Made by : **Tommy White**
Date : **04 August 2017 / Ver. 2017.08**
Checked :
Approved :

Part Block Tension	Only 1 Shear Plane		
$F_{Rd.b}=F_{u.}\bullet A_{nt}/ \gamma_{Mu}$	410 • 2068 / 1.1		
$+ F_{v.B1}\bullet A_{nv} / \sqrt{3} / \gamma_{M0}$	+ 265 • 319 / 1.73 • 1.0	819.6 kN	OK
Full Block Tension	Only 2 Shear Planes		
$F_{Rd.b}=F_{u.}\bullet A_{nt}/ \gamma_{Mu}$	410 • 2112 / 1.1		
$+ F_{v.B1}\bullet A_{nv} / \sqrt{3} / \gamma_{M0}$	+ 265 • 638 / 1.73 • 1.0	884.8 kN	OK
Full Depth Tension	No Shear Planes		
$F_{Rd.n}=0.9\bullet F_{u.p}\bullet A_{net.p} / \gamma_{Mu}$	0.9 • 410 • 3520 / 1.1	1180.8 kN	OK

ii) Bearing

P_1, e_1, P_2, e_2, α_b, k_1	0.0, 40.0, 70.0, 40.0, 0.606, 2.500		
$F_{b,Rd}=k_1\bullet \alpha_b\bullet f_{ub}\bullet d\bullet t_p/ \gamma_{Mu}$	2.5 • 0.606 • 410 • 20 • 11.0 / 1.1	124.2 kN	
$F_{Rd}=n\bullet F_{b,Rd}$	5 • 124.2	621.2 kN	OK

Checks for Flange Beam on Side 2

No Shear Load

Checks for Web Beam on Side 1

Check 1: Recommended Detailing Practice

Plate Depth >= 0.6•D	0.6 • 528.3 = 317 mm	430 mm	OK
t_w<= 0.5•F	10.0 mm		OK
t_w<= 0.5•F	10.0 mm		OK

Check 2: Supported beam - Bolt Group

i) Bolts in Shear

$ß=(6\bullet z) / (n_1.(n_1+1)\bullet p1)$	(6•50) / (6 • (6 + 1)• 70)	0.102	
$F_{v,Rd}=\alpha_v\bullet f_{ub}\bullet A / \gamma_{M2}$	0.6 • 800 • 245.0 / 1.25	94.1 kN	
$V_{Rd}=n\bullet F_{v.Rd}/ \sqrt{((1+a\bullet n)^2+(ß\bullet n)^2)}$	(6 • 94.08) / $\sqrt{((1+0.000\bullet 6)^2 + (0.102\bullet 6)^2)}$	481.4 kN	OK

ii) Fin plate bearing

Vert P_1, e_1, P_2, e_2, α_b, k_1	70.0, 40.0, 0.0, 50.0, 0.606, 2.500		
$F_{b,Rd}=k_1\bullet \alpha_b\bullet f_{up}\bullet d\bullet t_p/ \gamma_{M2}$	2.5 • 0.606 • 410 • 20 • 10.0 / 1.25	99.4 kN	
Horz P_1, e_1, P_2, e_2, α_b, k_1	0.0, 50.0, 70.0, 40.0, 0.758, 2.500		
$F_{b,Rd}=k_1\bullet \alpha_b\bullet f_{up}\bullet d\bullet t_p/ \gamma_{M2}$	2.5 • 0.758 • 410 • 20 • 10.0 / 1.25	124.2 kN	
$V_{.Rd}=N / \sqrt{(((1+a\bullet N) / F_{b.vert.Rd})^2}$	6.00 / $\sqrt{(((1 + 0.00 \bullet 6.00) / 99.39)^2}$		
$+(ß\bullet N / F_{b.hor.Rd})^2)$	+ (0.10 • 6.00) / 124.24)²)	535.6 kN	OK

iii) Beam Web bearing

Vert P_1, e_1, P_2, e_2, α_b, k_1	70.0, 68.0, 0.0, 40.0, 0.811, 2.500		
$F_{b,Rd}=k_1\bullet \alpha_b\bullet f_{ub}\bullet d\bullet t_p/ \gamma_{M2}$	2.5 • 0.811 • 410 • 20 • 9.6 / 1.25	127.6 kN	
Horz P_1, e_1, P_2, e_2, α_b, k_1	0.0, 40.0, 70.0, 68.0, 0.606, 2.500		
$F_{b,Rd}=k_1\bullet \alpha_b\bullet f_{ub}\bullet d\bullet t_p/ \gamma_{M2}$	2.5 • 0.606 • 410 • 20 • 9.6 / 1.25	95.4 kN	
$V_{.Rd}=N / \sqrt{(((1+a\bullet N) / F_{b.vert.Rd})^2}$	6.00 / $\sqrt{(((1 + 0.00 \bullet 6.00) / 127.62)^2}$		
$+(ß\bullet N / F_{b.hor.Rd})^2)$	+ (0.10 • 6.00) / 95.42)²)	592.4 kN	OK

Check 3:Supported Beam - Connecting Elements

i) Shear

$V_{Rd.g}=(h_p\bullet t_p/ 1.27)\bullet(f_{yp}/ \sqrt{3}/\gamma_{M0})$	(430•10/1.27) • (275/√3/1.0)	537.6 kN	OK
$V_{Rd.n}=A_{v.Net} \bullet f_{up}/\sqrt{3}/\gamma_{M2net}$	2980 • 410/√3/1.1	641.3 kN	OK
$V_{Rd.b}=(0.5\bullet f_{up}\bullet A_{nt} /\gamma_{M2net})$	(0.5 • 410 • 390 / 1.1)		
$+(F_{yp}\bullet A_{nv} /\sqrt{3}/\gamma_{M0})$	+ (275 • 2690 / √3/1.0)	499.8 kN	OK

ii) Bending

$V_{Rd}=8$	H_p >= 2.73•z	n.a.	OK

iii) Lateral torsional buckling

$V_{Rd}=(W_{el.P} / z)\bullet(F_{yP}/ \gamma_{M0})$	(308167 / 50) • (275 / 1.0)	1694.9 kN	OK

Check 4: Supported Beam - Resistance at the connection

i) Shear

$V_{Rd.G}=A_{v.wb}\bullet f_{y.b1} / \sqrt{3}/ \gamma_{M0}$	5418.68 • 275.00/√3/1.0	860.3 kN	OK
$V_{Rd.N}=A_{v.wb.net}\bullet f_{u.b1} / \sqrt{3} / \gamma_{M2}$	4151.48 • 410.00/ √3/1.1	893.4 kN	OK

iii) Shear & Bending Interaction of the Beam Web

data $V_{AB.Rd}$, $V_{BC.Rd}$, $V_{BC.Ed}$	61, 533.47, 132.50		
$M_{c.BC.Rd}=f_y\bullet t_w/6/\gamma_{M0} \bullet((n_1-1)\bullet p_1)^2$	(275.00 • 9.60 / 6 / 1.0) •(6-1) • 70)²	53.9 kN.m	
$M_{c.Ed}=V_{ed}\bullet Z_p$	200.00 • 50.00	10.00 kN.m	
$M_{c.Rd}=M_{c.BC.Rd}+V_{AB.Rd}\bullet(n_1-1)\bullet p_1$	53.90 + 60.97 •(6-1)•70	75.24 kN.m	OK

MasterSeries Sales Team
3 Castle Street
Carrickfergus
Co. Antrim BT38 7BE
Tel : 028 9036 5950

10002

Job Ref : **1472**
Sheet : **C / 719**
Made by : **Tommy White**
Date : **04 August 2017 / Ver. 2017.08**
Checked :
Approved :

Check 8: Supporting Member Welds

$a=0.7s >= 0.5\ t_p$	4.2 = 0.7 • 6 >= 0.5 • 10.0		**Warning**

Check 10: Supporting Member Local Resistance

i) Local Shear

$F_{Rd}=2 \cdot h_p \cdot t_p \cdot F_{vp}/(\sqrt{3} \cdot \gamma_{M0})$	2 • 430 • 7.2 • 275/(√3 • 1.0)	983.1 kN	OK

ii) Punching Shear

$t_2 \cdot f(u.2) \cdot h_p^2 /(V_{Ed} \cdot 6 \cdot z_p \cdot \gamma_{M2}) > 1$	7.2 • 410 • 430² / (200.0 • 6 • 50 • 1.25)	7.278>1	OK

Tie Forces

Applied Tie Force	200.0 kN		

Check 11: Structural integrity - Fin Plate

i) Tension

Part Block Tension	Only 1 Shear Plane		
$F_{Rd.b}=f_{u.p} \cdot A_{nt}/ \gamma_{Mu}$	410 • 2690 / 1.1		
$+ f_{y.p} \cdot A_{nv} / \sqrt{3} / \gamma_{M0}$	+ 275 • 390 / 1.73 • 1.0	1064.6 kN	OK
Full Block Tension	Only 2 Shear Planes		
$F_{Rd.b}=f_{u.p} \cdot A_{nt}/ \gamma_{Mu}$	410 • 2400 / 1.1		
$+ f_{y.p} \cdot A_{nv} / \sqrt{3} / \gamma_{M0}$	+ 275 • 780 / 1.73 • 1.0	1018.4 kN	OK
Full Depth Tension	No Shear Planes		
$F_{Rd.n}=0.9 \cdot F_{u.p} \cdot A_{net.p} / \gamma_{Mu}$	0.9 • 410 • 2980 / 1.1	999.7 kN	OK

ii) Shear

$F_{v,Rd}=\alpha_v \cdot f_{ub} \cdot A / \gamma_{Mu}$	0.6 • 800 • 245.0 / 1.1	106.9 kN	
$F_{Rd}=n \cdot F_{v,Rd}$	6 • 106.9	641.5 kN	OK

iii) Bearing

$P_1,\ e_1,\ P_2,\ e_2,\ \alpha_b,\ k_1$	0.0, 50.0, 70.0, 40.0, 0.758, 2.500		
$F_{b,Rd}=k_1 \cdot \alpha_b \cdot f_{up} \cdot d \cdot t_p/ \gamma_{Mu}$	2.5 • 0.758 • 410 • 20 • 10.0 / 1.1	141.2 kN	
$F_{Rd}=n \cdot F_{b,Rd}$	6 • 141.2	847.1 kN	OK

Check 12: Structural integrity - Supported Beam

i) Tension

Part Block Tension	Only 1 Shear Plane		
$F_{Rd.b}=F_{u.} \cdot A_{nt}/ \gamma_{Mu}$	410 • 2760 / 1.1		
$+ F_{y.B1} \cdot A_{nv} / \sqrt{3} / \gamma_{M0}$	+ 275 • 278 / 1.73 • 1.0	1072.9 kN	OK
Full Block Tension	Only 2 Shear Planes		
$F_{Rd.b}=F_{u.} \cdot A_{nt}/ \gamma_{Mu}$	410 • 2304 / 1.1		
$+ F_{y.B1} \cdot A_{nv} / \sqrt{3} / \gamma_{M0}$	+ 275 • 557 / 1.73 • 1.0	947.2 kN	OK
Full Depth Tension	No Shear Planes		
$F_{Rd.n}=0.9 \cdot F_{u.p} \cdot A_{net.p} / \gamma_{Mu}$	0.9 • 410 • 3804 / 1.1	1276.2 kN	OK

ii) Bearing

$P_1,\ e_1,\ P_2,\ e_2,\ \alpha_b,\ k_1$	0.0, 40.0, 70.0, 40.0, 0.606, 2.500		
$F_{b,Rd}=k_1 \cdot \alpha_b \cdot f_{ub} \cdot d \cdot t_p/ \gamma_{Mu}$	2.5 • 0.606 • 410 • 20 • 9.6 / 1.1	108.4 kN	
$F_{Rd}=n \cdot F_{b,Rd}$	6 • 108.4	650.6 kN	OK

Checks for Web Beam on Side 2

No Shear Load

MasterSeries Sales Team
3 Castle Street
Carrickfergus
Co. Antrim BT38 7BE
Tel : 028 9036 5950

10002

Job Ref	**: 1472**
Sheet	**: C / 721**
Made by	**: Tommy White**
Date	**: 04 August 2017 / Ver. 2017.08**
Checked	**:**
Approved	**:**

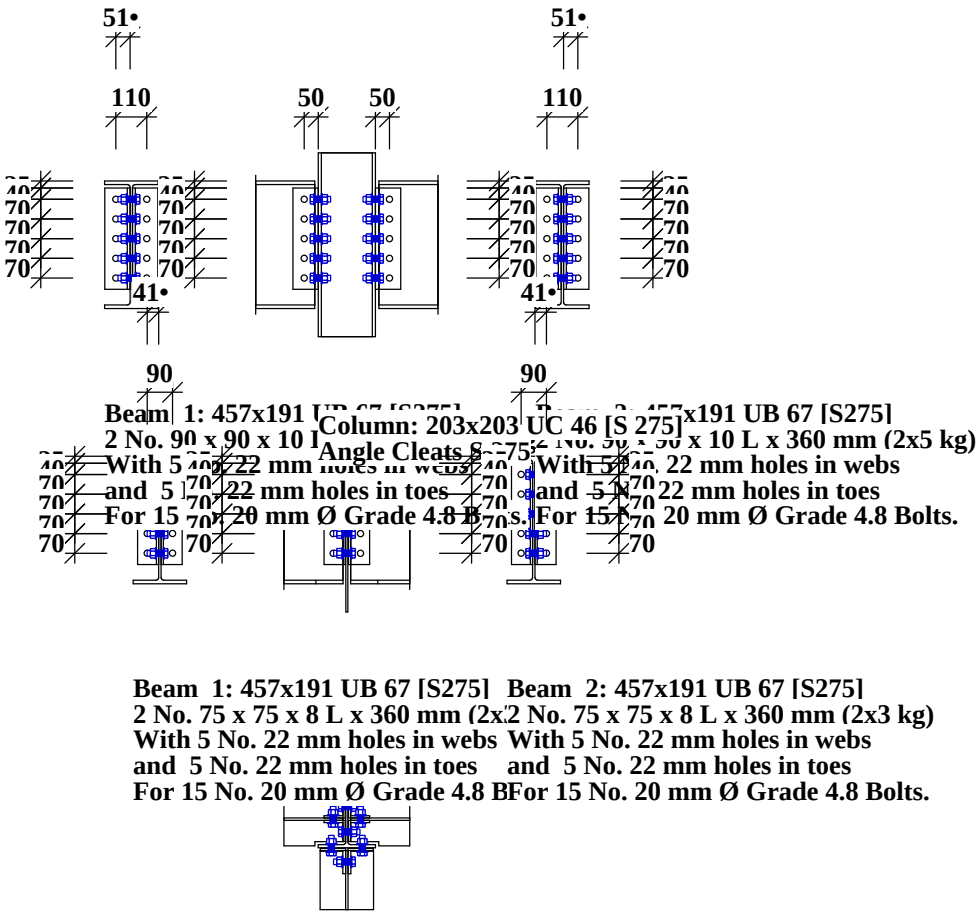

Beam to Column Angle Cleat
Beam to Column Angle Cleat Connection to EC 3 (UK NAD)
Basic Data

User Defined Applied Forces at Interface

Shear Forces	Flange 1 = 200.0 kN, Flange 2 = 200.0 kN
Tie Forces	75.0 kN
Design to	EC 3: Part 1-8: 2005 Design of Joints
SCI Green Book	P358: Joints in steel construction: Simple joints to Eurocode 3

Basic Dimensions

Flange 1-457x191UB67 [28]	D=453.4, B=189.9, T=12.7, t=8.5, r=10.2, py=275
Flange 2-457x191UB67 [28]	D=453.4, B=189.9, T=12.7, t=8.5, r=10.2, py=275
Web 1-457x191UB67 [28]	D=453.4, B=189.9, T=12.7, t=8.5, r=10.2, py=275
Web 2-457x191UB67 [28]	D=453.4, B=189.9, T=12.7, t=8.5, r=10.2, py=275
Column -203x203UC46 [28]	D=203.2, B=203.6, T=11.0, t=7.2, r=10.2, py=275
Bolts 20 mm Ø in 22 mm holes	Grade 4.8 Bolts
Plates S 275	All weld grades provided to suit minimum connected steel grade
Cleat Annotation	(Web) - Area of Cleats adjacent to supported beam web (like a fin-plate)
	(Toe) - Area of Cleats Perpendicular to supported beam web (like an end-plate)

MasterSeries Sales Team
3 Castle Street
Carrickfergus
Co. Antrim BT38 7BE
Tel : 028 9036 5950

10002

Job Ref	**: 1472**
Sheet	**: C / 722**
Made by	**: Tommy White**
Date	**: 04 August 2017 / Ver. 2017.08**
Checked	**:**
Approved	**:**

Summary of Results (Unity Ratios)

Checks for Flange Beams 1 & 2

Checks 8 & 9 Bearing & Shear (Toes)	313.6, 313.6, 313.6, 1076.0, 912.4 >= 200.0kN	0.64	OK
Check 10 Shear (Toes)	707.3, 698.3 >= 100.0kN	0.14	OK
Tie checks	0.59, 0.41, 0.61, 0.52	0.61	OK
Check 2: Bolt Shear & Bearing (web)	0.63, 0.25, 0.49	0.63	OK
Check 3: Sup.Beam Connect Elmts. (web)	0.22, 0.19, 0.25, 0.08	0.25	OK
Check 4: Shear & Bending (web)	0.31, 0.29, 0.22	0.31	OK

Checks for Web Beams 1 & 2

Checks for Flange Beams 1 & 2

Check 8a: Bolt Shear (Toes)

$F_{v,Rd}=\alpha_v \cdot f_{ub} \cdot A / \gamma_{M2}$	0.5 • 400 • 245.0 / 1.25	39.2 kN	
$V_{Rd1}=0.8 \cdot n \cdot F_{v,Rd} \cdot cols$	0.8 • 5 • 39.2 • 2	313.6 kN	OK

Check 8b: End-Plate Bearing (Toes)

P_1, e_1, P_2, e_2, α_b, k_1	70.0, 40.0, 50.0, 39.3, 0.606, 1.482		
$F_{b,Rd}=k_1 \cdot \alpha_b \cdot f_{up} \cdot d \cdot t_p / \gamma_{M2}$	1.5 • 0.606 • 410 • 20 • 10.0 / 1.25	58.9 kN	
$0.80 \cdot F_{v,Rd} < F_{b,Rd}$			
$F_{Rd}=0.80 \cdot n \cdot f_{v,Rd \cdot rows}$	0.80 • 5 • 39.2 • 2	313.6 kN	OK

Check 8c: Supporting Column Flange Bearing (Toes)

$\alpha_b=Min(p_1/d_0/3-¼, f_{ub}/f_u, 1)$	Min(70/22/3-¼, 400/410, 1) » Min(0.811, 0.976, 1)	0.811	
$k_{1 \cdot inn}=min(2.5, 1.4 \cdot p_2/d_0-1.7)$	min(2.5, 1.4 • 50/22 - 1.7 » Min(2.5, 1.5)	1.482	
$F_{b,Rd}=k_1 \cdot \alpha_b \cdot f_{u,2} \cdot d \cdot t_p / \gamma_{M2}$	1.5 • 0.811 • 410 • 20.0 • 11.0 / 1.25	86.7 kN	
$0.80 \cdot F_{v,Rd} < F_{b,Rd}$			
$F_{Rd}=0.80 \cdot n \cdot f_{v,Rd \cdot rows}$	0.80 • 5 • 39.2 • 2	313.6 kN	OK

Check 9a: End-Plate Plane Shear (Toes)

$V_{Rd4}=2 \cdot h_p \cdot t_p \cdot F_{yp}/(1.27 \cdot \sqrt{3} \cdot \gamma_{M0})$	2•360 • 10 • 275/(1.27 • √3 • 1.0)	900.1 kN	OK
$V_{Rd}=2 \cdot t_p \cdot (h_p-n_1 \cdot d_0) \cdot F_{up}/(\sqrt{3} \cdot \gamma_{M2})$	2•10•(360 - 5 • 22) • 410/(√3 • 1.1)	1076.0 kN	OK

Check 9b: End-Plate Block Shear (Toes)

A_{nv}, $A_{nt}=Fn(t_p, h_p, e_1, e_2, n_1, d_0)$	(10, 360, 40, 39, 5, 22)	2210, 283 mm²	
$V_{Rd}=2 \cdot (F_{up} \cdot A_{nt}/\gamma_{M2}+f_{yp} \cdot A_{nv}/(\sqrt{3} \cdot \gamma_{M0}))$	2•(410 • 283 / 1.1 + 2752210 • /(√3 • 1.0)	912.4 kN	OK

Check 10: Supporting Member - Local Resistance (Toes)

A_v, $A_{Vnet}=Fn(e_t, e_b, p_1, n, dia, T)$	fn(100, 25, 70, 5, 22.0, 11.0)	4455, 3245 mm²	
$V_{Rd}=A_v \cdot F_{yp}/(\sqrt{3} \cdot \gamma_{M0})$	4455 • 275/(√3 • 1.0)	707.3 kN	OK
$V_{Rd}=A_{vnet \cdot F_{up}}/(\sqrt{3} \cdot \gamma_{M2})$	3245 • 410/(√3 • 1.1)	698.3 kN	OK

Tie force Checks

Basic Data	Tie force = 200.0 kN		
Tie Force	Tie forces are analysed independently of any vertical loads.		
EC3 Design	Using conservative SCI P212 method to BS 5950		
New Tie force	Magnified by 1.2 for lower EC3 load Factors	240.0 kN	
Cleat toe Le=e1+e2+(n-1)•pe-n•d'	39 + 39 + (5-1) x 70 - 5 x 22.0	248.5 mm	
Cleat Ten cap =0.60•Le•t•py	0.60 x 248.5 x 10 x 275	410.0 kN	OK
Beam Web Le=e1+e2+(n-1)•pe-n•d'	40 + 40 + (5-1) x 70 - 5 x 22.0	250.0 mm	
Web Ten cap=Le•t•py	250.0 x 9 x 275	584.4 kN	OK
Web Bear cap=Fn(t, Pbg, e, n, Ø, kbs)	8.5, 460, 40, 5, 20, 1.00	391.0 kN	OK
Cleat Bear cap=Fn(t, Pbg, e, n, Ø, kbs)	10.0, 460, 40, 5, 20, 1.00	460.0 kN	OK
Prying Ratio Pr=(l1+2•tk) / (2•tk)	(9 + 2 x 10) / (2 x 10)	1.46	
Bolt Cap=Us•Anet/(1.25•Pr)•bolts	393 x 245/(1.25 x 1.46) x 10	526.0 kN	OK

Check 2: Supported beam - Bolt Group (web)

i) Bolts in Shear

$ß=(6 \cdot z) / (n_1 \cdot (n_1+1) \cdot p1)$	(6•50) / (5 • (5 + 1)• 70)	0.143	
$F_{v,Rd}=\alpha_v \cdot f_{ub} \cdot A / \gamma_{M2}$	0.5 • 400 • 245.0 / 1.25	39.2 kN	
$V_{Rd}=2 \cdot n \cdot F_{v \cdot Rd} / \sqrt{((1+a \cdot n)^2+(ß \cdot n)^2)}$	(2•5 • 39.20) / √((1+0.000•5)² + (0.143•5)²)	319.0 kN	OK

ii) Fin plate bearing

MasterSeries Sales Team
3 Castle Street
Carrickfergus
Co. Antrim BT38 7BE
Tel : 028 9036 5950

10002

Job Ref : **1472**
Sheet : **C / 723**
Made by : **Tommy White**
Date : **04 August 2017 / Ver. 2017.08**
Checked :
Approved :

Vert P_1, e_1, P_2, e_2, α_b, k_1	70.0, 40.0, 0.0, 40.0, 0.606, 2.500		
$F_{b,Rd}=k_1 \cdot \alpha_b \cdot f_{up} \cdot d \cdot t_p / \gamma_{M2}$	2.5 • 0.606 • 410 • 20 • 10.0 / 1.25	99.4 kN	
Horz P_1, e_1, P_2, e_2, α_b, k_1	0.0, 40.0, 70.0, 40.0, 0.606, 2.500		
$F_{b,Rd}=k_1 \cdot \alpha_b \cdot f_{up} \cdot d \cdot t_p / \gamma_{M2}$	2.5 • 0.606 • 410 • 20 • 10.0 / 1.25	99.4 kN	
$V_{.Rd}=2 \cdot N / \sqrt{(((1+a \cdot N) / F_{b.vert.Rd})^2}$	$2 \cdot 5.00 / \sqrt{(((1 + 0.00 \cdot 5.00) / 99.39)^2}$		
$+(ß \cdot N / F_{b.hor.Rd})^2)$	$+ (0.14 \cdot 5.00) / 99.39)^2)$	808.8 kN	OK

iii) Beam Web bearing

Vert P_1, e_1, P_2, e_2, α_b, k_1	70.0, 65.0, 0.0, 40.0, 0.811, 2.500		
$F_{b,Rd}=k_1 \cdot \alpha_b \cdot f_{ub} \cdot d \cdot t_p / \gamma_{M2}$	2.5 • 0.811 • 410 • 20 • 8.5 / 1.25	113.0 kN	
Horz P_1, e_1, P_2, e_2, α_b, k_1	0.0, 40.0, 70.0, 65.0, 0.606, 2.500		
$F_{b,Rd}=k_1 \cdot \alpha_b \cdot f_{ub} \cdot d \cdot t_p / \gamma_{M2}$	2.5 • 0.606 • 410 • 20 • 8.5 / 1.25	84.5 kN	
$V_{.Rd}=N / \sqrt{(((1+a \cdot N) / F_{b.vert.Rd})^2}$	$5.00 / \sqrt{(((1 + 0.00 \cdot 5.00) / 113.00)^2}$		
$+(ß \cdot N / F_{b.hor.Rd})^2)$	$+ (0.14 \cdot 5.00) / 84.48)^2)$	408.5 kN	OK

Check 3:Supported Beam - Connecting Elements (web)

i) Shear

$V_{Rd.g}=2 \cdot (h_p \cdot t_p / 1.27) \cdot (f_{yp} / \sqrt{3} / \gamma_{M0})$	$2 \cdot (360 \cdot 10/1.27) \cdot (275/\sqrt{3}/1.0)$	900.1 kN	OK
$V_{Rd.n}=2 \cdot A_{v.Net} \cdot f_{up} / \sqrt{3} / \gamma_{M2net}$	$2 \cdot 2500 \cdot 410/\sqrt{3}/1.1$	1076.0 kN	OK
$V_{Rd.b}=2 \cdot (0.5 \cdot f_{up} \cdot A_{nt} / \gamma_{M2net})$	$2 \cdot (0.5 \cdot 410 \cdot 290 / 1.1)$		
$+2 \cdot (F_{yp} \cdot A_{nv} / \sqrt{3} / \gamma_{M0})$	$+ 2 \cdot (275 \cdot 2210 / \sqrt{3}/1.0)$	809.9 kN	OK

ii) Bending

$V_{Rd}=8$	$H_p >= 2.73 \cdot z$	n.a.	OK

iii) Lateral torsional buckling

$V_{Rd}=2 \cdot (W_{el.P} / z) \cdot (F_{yP} / \gamma_{M0})$	$2 \cdot (216000 / 50) \cdot (275 / 1.0)$	2376.0 kN	OK

Check 4: Supported Beam - Resistance at the connection (web)

i) Shear

$V_{Rd.G}=A_{v.wb} \cdot f_{y.b1} / \sqrt{3} / \gamma_{M0}$	$4093.57 \cdot 275.00/\sqrt{3}/1.0$	649.9 kN	OK
$V_{Rd.N}=A_{v.wb.net} \cdot f_{u.b1} / \sqrt{3} / \gamma_{M2}$	$3158.57 \cdot 410.00/ \sqrt{3}/1.1$	679.7 kN	OK

iii) Shear & Bending Interaction of the Beam Web

data $V_{AB.Rd}$, $V_{BC.Rd}$, $V_{BC.Ed}$	54, 377.88, 123.51		
$M_{c.BC.Rd}=f_y \cdot t_w/6/\gamma_{M0} \cdot ((n_1-1) \cdot p_1)^2$	$(275.00 \cdot 8.50 / 6 / 1.0) \cdot (5-1) \cdot 70)^2$	30.5 kN.m	
$M_{c.Ed}=V_{ed} \cdot Z_p$	$200.00 \cdot 50.00$	10.00 kN.m	
$M_{c.Rd}=M_{c.BC.Rd}+V_{AB.Rd} \cdot (n_1-1) \cdot p_1$	$30.54 + 53.98 \cdot (5-1) \cdot 70$	45.66 kN.m	OK

Checks for Web Beams 1 & 2

No Shear Load

MasterSeries Sales Team
3 Castle Street
Carrickfergus
Co. Antrim BT38 7BE
Tel : 028 9036 5950

10002

Job Ref	**: 1472**
Sheet	**: C / 725**
Made by	**: Tommy White**
Date	**: 04 August 2017 / Ver. 2017.08**
Checked	**:**
Approved	**:**

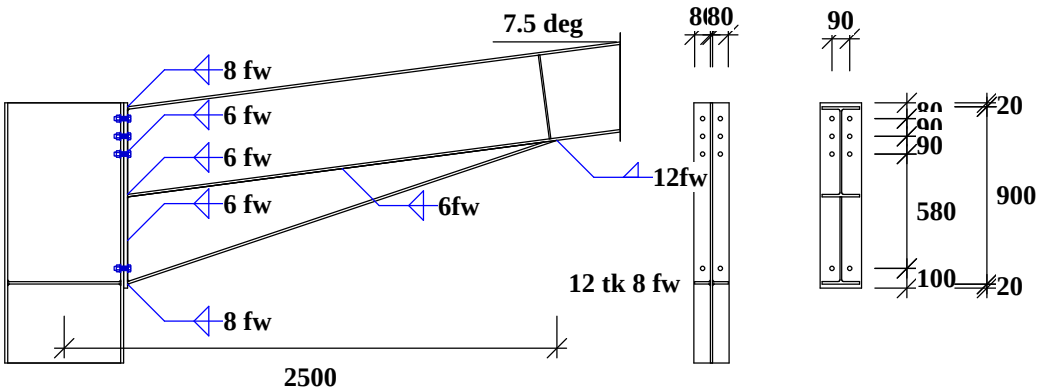

Plates S 275
Beam 457x191 UB 67 [S275]
Haunch 457x191 UB 67 [S275]

Column 610x178 UB 92 [S275]
Top 20 above top flange
Bot 400 below bottom flange

End-Plate 940 x 210 x 20 mm (31 kg)
8 No. M20 Grade 8.8 Bolts in 22 mm holes
Haunch Stiff 8 mm with 6 FW

1 Eaves Joint
Beam to Column Flange End-Plated Connection to EC 3 (UK NAD)
Loading Case 001
Basic Data

User Defined Applied Forces at Column/Right Rafter Interface

Right Rafter Forces M, Fvr, Fr	450.0 kNm, 300.0 kN, 100.0 kN
Resultant Forces M, Fv, F	450.0 kNm, 310.5 kN, 60.0 kN
Load directions	Top of Joint in Tension, Rafter moving Down and in Compression.
Design to	EC 3: Part 1-8: 2005 Design of Joints
Weld Grades	All weld grades provided to suit minimum connected steel grade

Basic Dimensions

Column-610x178UB92 [28]	D=603.0, B=178.8, T=15.0, t=10.9, r=12.7, py=275		
Rafter-457x191UB67 [28]	D=453.4, B=189.9, T=12.7, t=8.5, r=10.2, py=275		
Haunch-457x191UB67 [28]	D=453.4, B=189.9, T=12.7, t=8.5, r=10.2, py=275		
Bolts 20 mm Ø in 22 mm holes	Grade 8.8 Bolts		
Plates S 275	All weld grades provided to suit minimum connected steel grade		
Rafter Capacities Mc, Fvc, Fc	1046.2 kN.m, 1252.6 kN, 3395.2 kN	Mc = 1046.2 kN.m	OK

Summary of Results (Unity Ratios)

Moment Capacity 473.6 kNm (for 3 rows of bolts) (Modified Applied Mom. M_{mod}=410.1 kNm)		0.87	OK
Shear Capacity		0.90	OK
Flange Welds	0.68	0.68	OK
Web Welds	0.97, 0.29	0.97	OK
Haunch Welds	0.79, 0.07	0.79	OK
Column Compression stiff Web Weld	0.22	0.22	OK
End of Haunch Compression Zone	0.10, 0.07	0.10	OK

MasterSeries Sales Team
3 Castle Street
Carrickfergus
Co. Antrim BT38 7BE
Tel : 028 9036 5950

10002

Job Ref	**: 1472**
Sheet	**: C / 727**
Made by	**: Tommy White**
Date	**: 04 August 2017 / Ver. 2017.08**
Checked	**:**
Approved	**:**

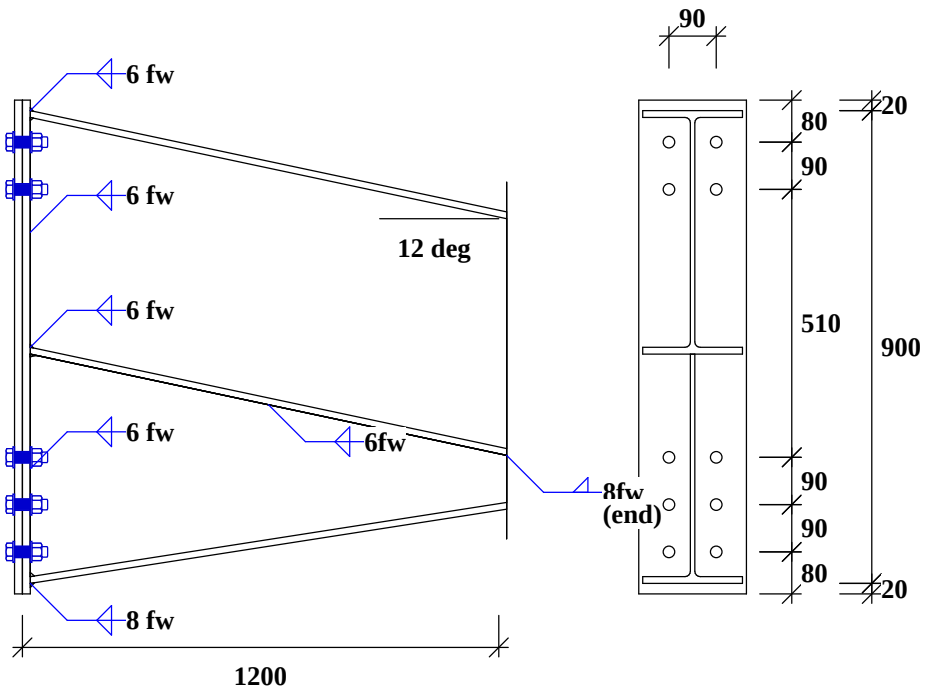

Plates S 275
Beam 457x191 UB 67 [S275]
Haunch 457x191 UB 67 [S275]

End-Plate 940 x 205 x 15 mm (23 kg)
10 No. M20 Grade 8.8 Bolts in 22 mm holes

Apex Joint
Beam to Beam End-Plated Connection to EC 3 (UK NAD)
Loading Case 001
Basic Data

User Defined Applied Forces at End-plate Interface

Right Rafter Forces M, Fvr, Fr	-150.0 kNm, 400.0 kN, 300.0 kN
Resultant Forces M, Fv, F	-150.0 kNm, 328.9 kN, 376.6 kN
Load directions	Bottom of Joint in Tension, Rafter moving Down and in Compression.
Design to	EC 3: Part 1-8: 2005 Design of Joints
Weld Grades	All weld grades provided to suit minimum connected steel grade

Basic Dimensions

Rafter-457x191UB67 [28]	D=453.4, B=189.9, T=12.7, t=8.5, r=10.2, py=275		
Haunch-457x191UB67 [28]	D=453.4, B=189.9, T=12.7, t=8.5, r=10.2, py=275		
Bolts 20 mm Ø in 22 mm holes	Grade 8.8 Bolts		
Plates S 275	All weld grades provided to suit minimum connected steel grade		
Rafter Capacities Mc, Fvc, Fc	1046.2 kN.m, 1252.6 kN, 3395.2 kN	Fvc = 1252.6 kN	OK

Summary of Results (Unity Ratios)

Moment Capacity 524.4 kNm (for 4 rows of bolts) (Modified Applied Mom. M_{mod}=66.6 kNm)		0.13	OK
Moment Capacity 203.7 kNm (for the 1 rows of bolts required in the tension zone)		0.33	OK
Shear Capacity		0.41	OK
Flange Welds	0.15	0.15	OK
Web Welds	0.49, 0.24	0.49	OK
Haunch Welds	0.58, 0.23	0.58	OK

MasterSeries Sales Team
3 Castle Street
Carrickfergus
Co. Antrim BT38 7BE
Tel : 028 9036 5950

10002

Job Ref	**: 1472**
Sheet	**: C / 729**
Made by	**: Tommy White**
Date	**: 04 August 2017 / Ver. 2017.08**
Checked	**:**
Approved	**:**

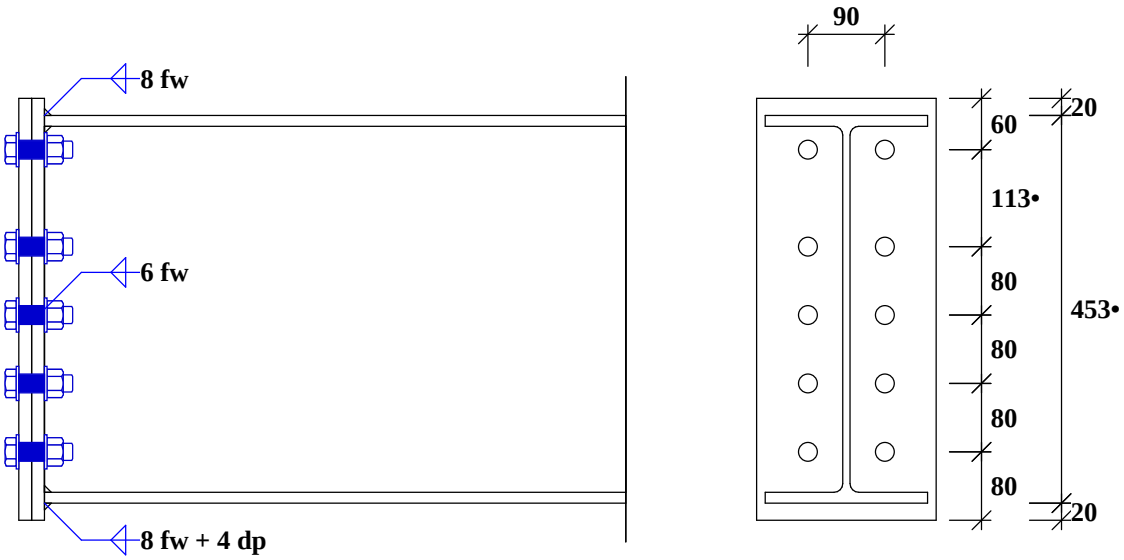

Plates S 275
Beam 457x191 UB 67 [S275]

End-Plate 493 x 210 x 15 mm (12 kg)
10 No. M20 Grade 8.8 Bolts in 22 mm holes

End-Plated Splice
Beam to Beam End-Plated Connection to EC 3 (UK NAD)
Loading Case 001
Basic Data

User Defined Applied Forces at End-plate Interface

Resultant Forces M, Fv, F	-235.0 kNm, 400.0 kN, 300.0 kN
Load directions	Bottom of Joint in Tension, Rafter moving Down and in Compression.
Design to	EC 3: Part 1-8: 2005 Design of Joints
Weld Grades	All weld grades provided to suit minimum connected steel grade

Basic Dimensions

Beam-457x191UB67 [28]	D=453.4, B=189.9, T=12.7, t=8.5, r=10.2, py=275		
Bolts 20 mm Ø in 22 mm holes	Grade 8.8 Bolts		
Plates S 275	All weld grades provided to suit minimum connected steel grade		
Rafter Capacities Mc, Fvc, Fc	404.5 kN.m, 649.9 kN, 2351.3 kN	Fvc = 649.9 kN	OK

Summary of Results (Unity Ratios)

Moment Capacity 191.5 kNm (for 4 rows of bolts) (Modified Applied Mom. M_{mod}=168.9 kNm)		0.88	OK
Moment Capacity 191.5 kNm (for the 3 rows of bolts required in the tension zone)		0.88	OK
Shear Capacity		0.75	OK
Flange Welds	0.46	0.46	OK
Web Welds	0.77, 0.77, 0.68	0.77	OK

MasterSeries Sales Team
3 Castle Street
Carrickfergus
Co. Antrim BT38 7BE
Tel : 028 9036 5950

10002

Job Ref : **1472**
Sheet : **C / 731**
Made by : **Tommy White**
Date : **04 August 2017 / Ver. 2017.08**
Checked :
Approved :

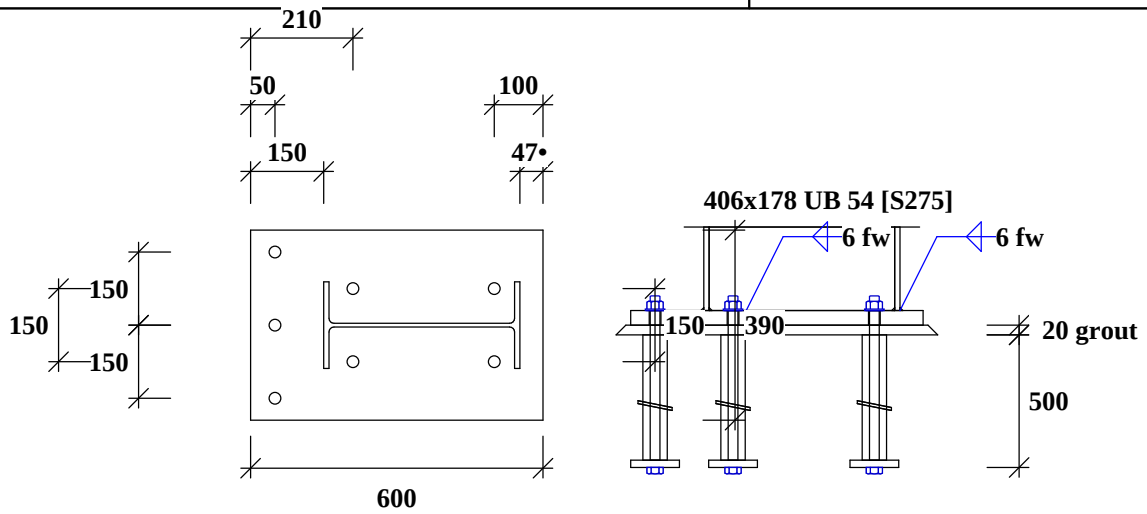

Base-Plate 600 x 390 x 30 mm (55 With 7 No. 24 mm holes For 20 mm Grade 8.8 Bolts.

Washers 100 x 100 x 15 mm thick with 50 mm Void
All Plates S 275
Reinforcement 12 @ 200 mm cc each way. Cover 0 mm

Asymetrical Base-Plate
Base-Plate Connection to EC 3 (UK NAD)
Loading Case 001
Basic Data

User Defined Applied Forces at Interface

Resultant Forces M, Fv, F	Moment +125.0 kNm, Shear +500.0 kN, Axial +1300.0 kN (Left side in tension, Axial Compression)

Basic Dimensions

Column: 406x178UB54 [28]	D=402.6, B=177.7, T=10.9, t=7.7, r=10.2, py=275		
Bolts 20 mm Ø in 24 mm holes	Grade 8.8 Bolts		
Plates S 275	All weld grades provided to suit minimum connected steel grade		
Grout Fck, Conc Fck, fy, slope	20 N/mm², 32 N/mm², 0.35 N/mm², 265 N/mm², 30 deg to vertical		
Design to	EC 3: Part 1-8: 2005 Design of Joints		
Column Capacities Mc, Fvc, Fc	290.0 kN.m, 528.3 kN, 1896.1 kN	Fvc = 528.3 kN	OK

Summary of Results (Unity Ratios)

Concrete Pressure		1.00	OK
Base-Plate thickness in Compression		0.96	OK
Horizontal Shear		0.86	OK
Flange & Web Welds	0.72	0.72	OK

MasterSeries Sales Team
3 Castle Street
Carrickfergus
Co. Antrim BT38 7BE
Tel : 028 9036 5950

10002

Job Ref : 1472
Sheet : C / 733
Made by : Tommy White
Date : 04 August 2017 / Ver. 2017.08
Checked :
Approved :

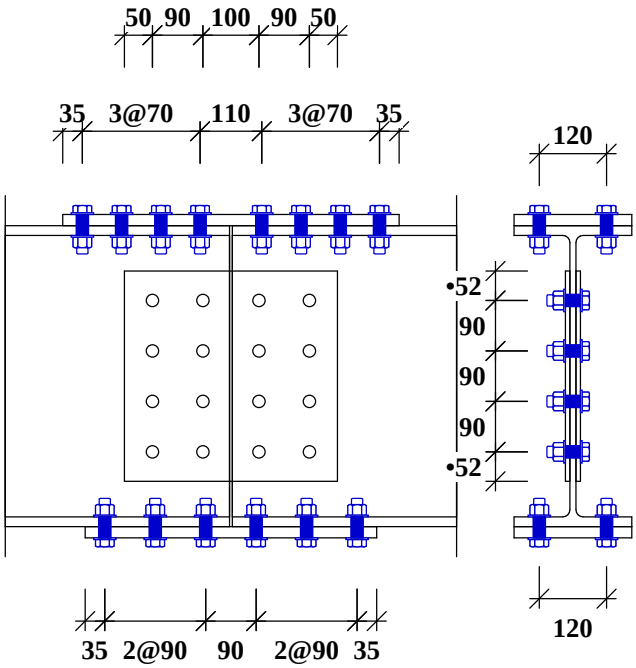

Splice Plates

Top Flange
1 No 600 x 210 x 20 mm (20 kg)

Web
2 No 380 x 375 x 8 mm (2x9 kg)

Bottom Flange
1 No 520 x 210 x 20 mm (17 kg)

HSFG - Pt 2 Bolts (non-slip at service)
44 No. 20 mm Ø Bolts
In 22 mm Holes

Beams 533x210 UB 101 [S275]
All Plates S 275
Beam gap 5 mm

Beam-Splice Outer Plates

Non Bearing - Beam to Beam Moment Splice Connection to EC 3 (UK NAD)

Loading Case 001

Basic Data

User Defined Applied Forces at Interface

Resultant Forces M, Fv, F	+200.0 kNm, +0.0 kN, +0.0 kN (Bottom in tension)	
Beam Gap= 5 mm	Therefore No direct bearing.	
HSFG Bolts	Non-slip at service Ultimate/Service factor for service force calculation.	1.2
Design to	EC 3: Part 1-8: 2005 Design of Joints	

Basic Dimensions

Beam-533x210UB101 [28]	D=536.7, B=210.0, T=17.4, t=10.8, r=12.7, py=265		
Bolts 20 mm Ø in 22 mm holes	HSFG - Pt 2 Bolts, Non-slip at Service		
Plates S 275	All weld grades provided to suit minimum connected steel grade		
Beam Capacities Mc, Fvc, Fc	692.2 kN.m, 946.7 kN, 3409.5 kN	Mc = 692.2 kN.m	OK

Summary of Results (Unity Ratios)

Top Flange in Compression Bolt Capacity		0.45	OK
Top Flange in Compression Axial Capacity		0.32	OK
Bottom Flange in Tension Bolt Capacity		0.60	OK
Bottom Flange in Tension Axial Capacity		0.32	OK
Web Bolt Capacity	0.41, 0.34	0.41	OK
Web Plate Shear Capacity	0.00, 0.00, 0.00	0.00	OK
Web Plate Moment Capacity		0.35	OK
Web Axial Capacity		0.00	OK

MasterSeries Sales Team
3 Castle Street
Carrickfergus
Co. Antrim BT38 7BE
Tel : 028 9036 5950

10002

Job Ref	: 1472
Sheet	: C / 735
Made by	: Tommy White
Date	: 04 August 2017 / Ver. 2017.08
Checked	:
Approved	:

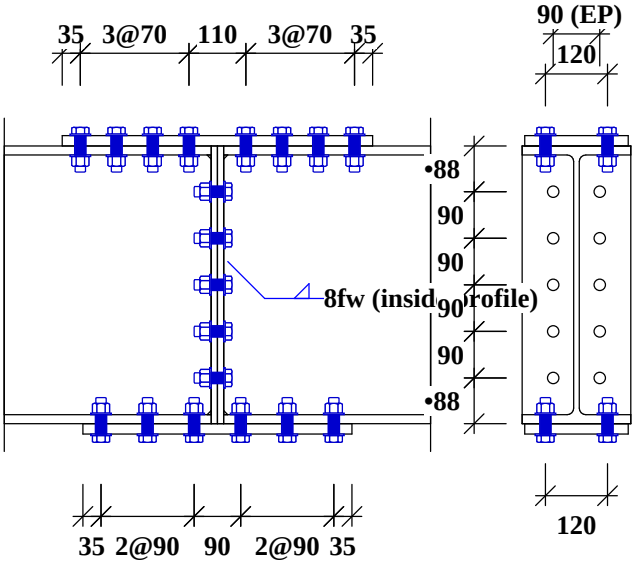

Splice Plates

Top Flange
1 No 600 x 200 x 20 mm (19 kg)

Bearing End-plates
2 No 536 x 210 x 12 mm (2x21 kg)

Bottom Flange
1 No 520 x 200 x 20 mm (16 kg)

HSFG - Pt 2 Bolts (non-slip at service)
38 No. 20 mm Ø Bolts
In 22 mm Holes

Beams 533x210 UB 101 [S275]
All Plates S 275
Beam Prepared for Direct Bearing

Beam-Splice end-plated splice
Bearing - Beam to Beam Moment Splice Connection to EC 3 (UK NAD)
Loading Case 001
Basic Data

User Defined Applied Forces at Interface

Resultant Forces M, Fv, F	+255.0 kNm, +0.0 kN, +0.0 kN (Bottom in tension)	
Web End plates	Direct Bearing assumed All Moment resisted by Flanges All Shear loads resisted by Web bolts and Friction	
HSFG Bolts	Non-slip at service Ultimate/Service factor for service force calculation.	1.2
Design to	EC 3: Part 1-8: 2005 Design of Joints	

Basic Dimensions

Beam-533x210UB101 [28]	D=536.7, B=210.0, T=17.4, t=10.8, r=12.7, py=265		
Bolts 20 mm Ø in 22 mm holes	HSFG - Pt 2 Bolts, Non-slip at Service		
Plates S 275	All weld grades provided to suit minimum connected steel grade		
Beam Capacities Mc, Fvc, Fc	692.2 kN.m, 946.7 kN, 3409.5 kN	Mc = 692.2 kN.m	OK

Summary of Results (Unity Ratios)

Top Flange in Compression Axial Capacity	0.49	OK
Bottom Flange in Tension Bolt Capacity	0.94	OK
Bottom Flange in Tension Axial Capacity	0.49	OK

MasterSeries Sales Team
3 Castle Street
Carrickfergus
Co. Antrim BT38 7BE
Tel : 028 9036 5950

10002

Job Ref	**: 1472**
Sheet	**: C / 737**
Made by	**: Tommy White**
Date	**: 04 August 2017 / Ver. 2017.08**
Checked	**:**
Approved	**:**

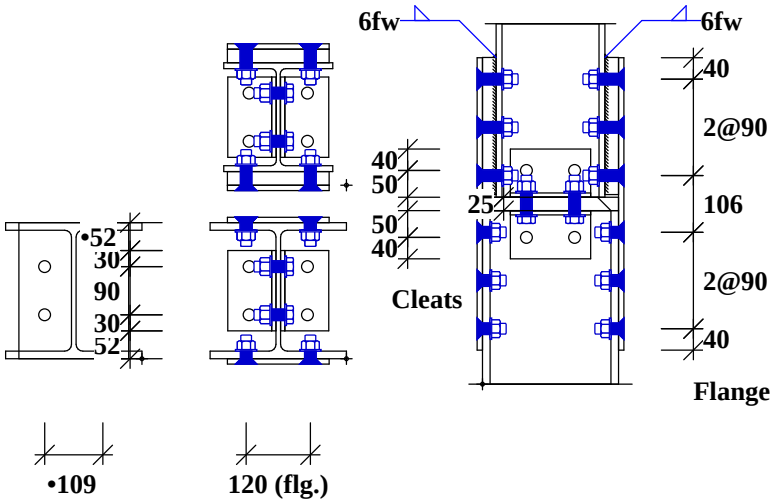

Upper Column 203x203 UC 46 [S275]
Lower Column 254x254 UC 73 [S275]
External Flange Plates
2/546 x 190 x 10 mm (2x8 kg)
External Packers
2/256 x 190 x 25 (aprox) mm (2x10 kg)
Welded to Flange with 6 mm FW (top & si

Bearing Divider Plate
254 x 205 x 25 mm (10 kg)

Web Angle Cleats
4/90 x 90 x 8 Ang x 150 mm (4x2 kg)
2 bolts per leg. 90 cc with 50 back mark

HSFG - Pt 2 Bolts (non-slip at service)
32 No. 20 mm Ø Bolts
In 22 mm Holes

All Plates S 275
Column Prepared for Direct Bearing

Column Splice with division Plate
Bearing - Column Splice Connection to EC 3 (UK NAD)
Basic Data

User Defined Applied Forces at Interface

F_C	Maximum Factored Axial Load	150.0 kN	Compression
F_{CD}	Minimum Factored Axial Load	140.0 kN	Compression
M	Factored Moment	25.0 kN.m	
F_v	Factored Shear Force	0.0 kN	
Web Division Plate	Direct Bearing assumed		
	All Moment and Axial loads resisted by Flanges		
	All Shear loads resisted by Web bolts and Friction		
HSFG Bolts	Non-slip at service		
	Ultimate/Service factor for service force calculation.	1.2	
Design to	EC 3: Part 1-8: 2005 Design of Joints		

Basic Dimensions

Upper Column-203x203UC46 [28]	D=203.2, B=203.6, T=11.0, t=7.2, r=10.2, py=275, F_c=1615 kN
Lower Column-254x254UC73 [28]	D=254.1, B=254.6, T=14.2, t=8.6, r=12.7, py=275, F_c=2560 kN
Bolts 20 mm Ø in 22 mm holes	HSFG - Pt 2 Bolts, Non-slip at Service
Plates S 275	All weld grades provided to suit minimum connected steel grade

Summary of Results (Unity Ratios)

Plate & Flange Capacity in Tension	0.12	OK
Flange Bolts Shear Capacity Bolt Capacity	0.16	OK
Flange Bolts Shear Capacity Packer Weld	0.05	OK

MasterSeries Sales Team
3 Castle Street
Carrickfergus
Co. Antrim BT38 7BE
Tel : 028 9036 5950

10002

Job Ref	**: 1472**
Sheet	**: C / 739**
Made by	**: Tommy White**
Date	**: 04 August 2017 / Ver. 2017.08**
Checked	**:**
Approved	**:**

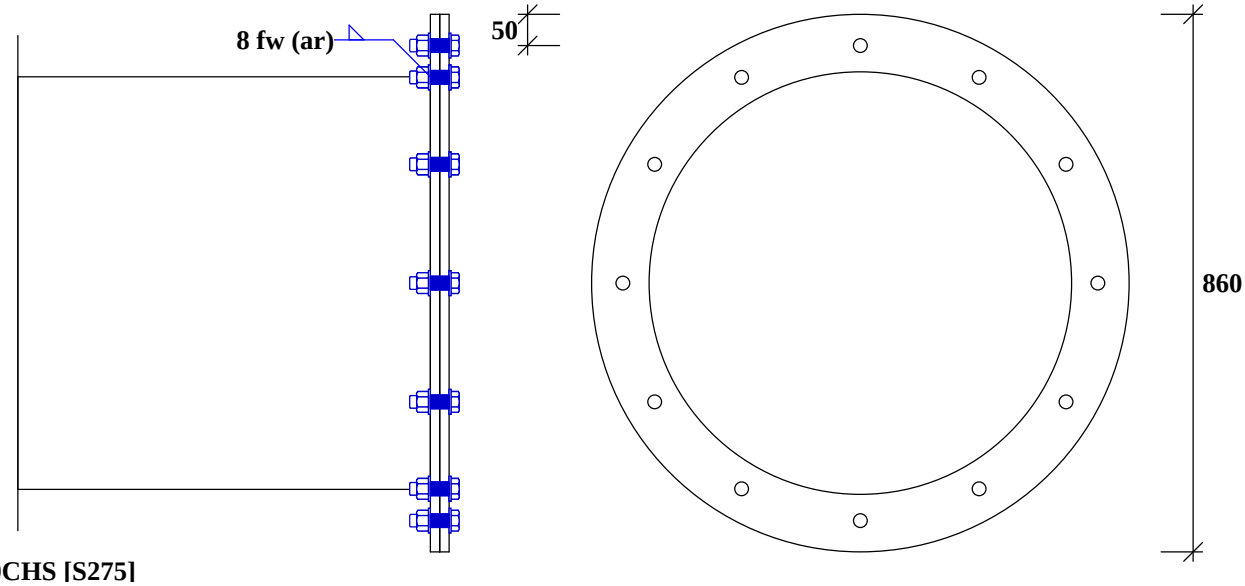

660x20CHS [S275]
End-Plate 860x15 mm (68 kg)
Plates S 275
12 No. M20 Grade 8.8 Bolts in 22 mm holes
On 760 mm PCD

CHS Hollow Section Splice
Hollow Section Splice Connection to EC 3 (UK NAD)
Loading Case 001
Basic Data

User Defined Applied Forces at Interface

Applied Forces	F = -300.0 kN (T), M_{xx} = +30.0 kNm,
Design to	EC 3: Part 1-8: 2005 Design of Joints

Basic Dimensions

Beam-660x20CHS [28]	Ø=660.0, T=20.0, py=265
Bolts 20 mm Ø in 22 mm holes	Grade 8.8 Bolts
Plates S 275	All weld grades provided to suit minimum connected steel grade

Summary of Results (Unity Ratios)

End-Plate & Bolts	0.35, 0.39, 0.25	0.39	OK
Welds		0.19	OK
Section Capacity	0.04, 0.01, 0.04	0.04	OK

MasterSeries Sales Team
3 Castle Street
Carrickfergus
Co. Antrim BT38 7BE
Tel : 028 9036 5950

10002

Job Ref	: 1472
Sheet	: C / 741
Made by	: Tommy White
Date	: 04 August 2017 / Ver. 2017.08
Checked	:
Approved	:

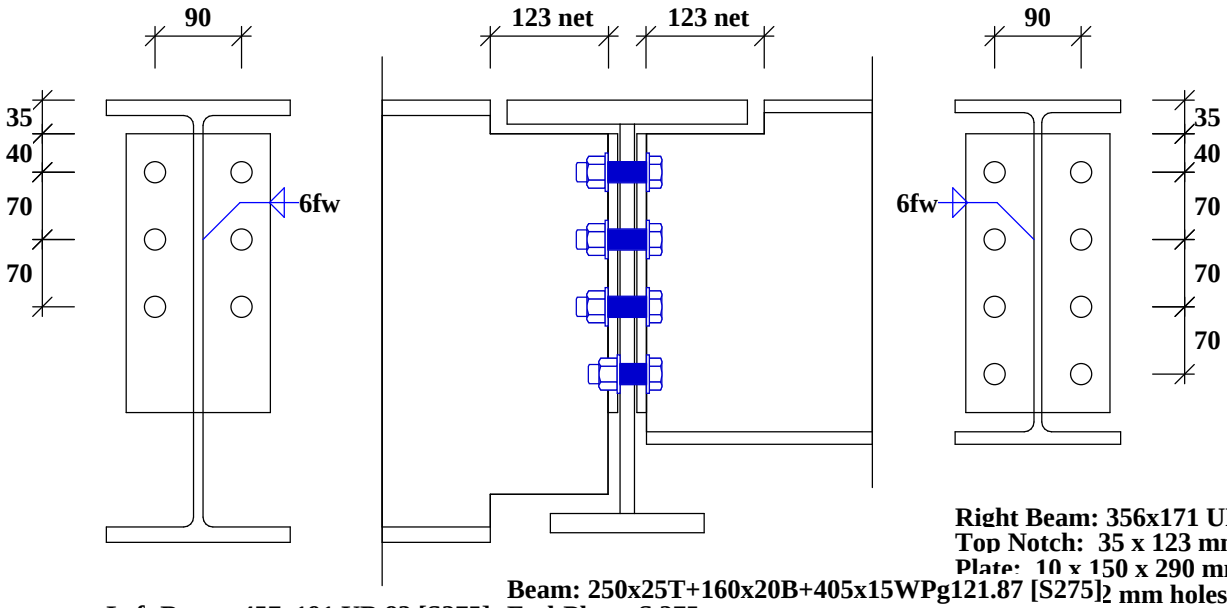

Left Beam: 457x191 UB 82 [S275]
Top Notch: 35 x 123 mm lg. net
Bot Notch: 50 x 123 mm lg. net
Plate: 10 x 150 x 290 mm dp. (3 kg)
With 6 No. 22 mm holes
For 20 mm Ø Grade 8.8 Bolts.

Beam: 250x25T+160x20B+405x15WPg121.87 [S275]
End-Plates S 275

Right Beam: 356x171 UB 57 [S275]
Top Notch: 35 x 123 mm lg. net
Plate: 10 x 150 x 290 mm dp. (3 kg)
With 6 No. 22 mm holes
For 20 mm Ø Grade 8.8 Bolts.

Beam to Beam Flexible End-Plate - with Asymetrical Plate Girders
Beam to Beam Flexible End-plate Connection to EC 3 (UK NAD)
Basic Data

User Defined Applied Forces at Interface

Shear Forces	Left = 235.0 kN, Right = 170.0 kN
Tie Force	75.0 kN
Design to	EC 3: Part 1-8: 2005 Design of Joints

Basic Dimensions

Left-457x191UB82 [28]	D=460.0, B=191.3, T=16.0, t=9.9, r=10.2, py=275
Supporting-250x25T+160x20B+405x15WPg121.87 [28]	
	D=450.0, B=250.0, B_2=160.0, T=25.0, T_2=20.0, t=15.0, py=265
Right-356x171UB57 [28]	D=358.0, B=172.2, T=13.0, t=8.1, r=10.2, py=275
Bolts 20 mm Ø in 22 mm holes	Grade 8.8 Bolts
Plates S 275	All weld grades provided to suit minimum connected steel grade

Summary of Results (Unity Ratios)

Left Hand Beam

Check 4 Supported Beam Web Shear	410.2 >= 235.0kN	0.57	OK
Checks 1 & 2 Detailing Practice	1.00, 0.83, 1.00, 0.64, 0.710.94	1.00	OK
Check 5: Notch Resistance	0.50	0.50	OK
Check 6: Notch Stability	0.54	0.54	OK
Checks 8 & 9 Bearing & Shear	451.6, 451.6, 451.6, 964.1, 760.8 >= 235.0kN	0.52	OK
Check 10 Shear	596.7, 626.2 >= 181.3kN	0.30	OK
Check 10 Combined Bearing	199.4 >= 60.4kN	0.30	OK
Check 11-14 Tie Forces	296.9, 506.3, 962.2, 1070.1 >= 235.0kN	0.79	OK

MasterSeries Sales Team
3 Castle Street
Carrickfergus
Co. Antrim BT38 7BE
Tel : 028 9036 5950

10002

Job Ref : **1472**
Sheet : **C / 742**
Made by : **Tommy White**
Date : **04 August 2017 / Ver. 2017.08**
Checked :
Approved :

Right Hand Beam

Check 4 Supported Beam Web Shear	335.7 >= 170.0kN	0.51	OK
Checks 1 & 2 Detailing Practice	1.00, 0.83, 1.00, 0.64, 0.710.77	1.00	OK
Check 5: Notch Resistance	0.39	0.39	OK
Check 6: Notch Stability	0.35	0.35	OK
Checks 8 & 9 Bearing & Shear	602.1, 602.1, 602.1, 869.4, 691.0 >= 170.0kN	0.28	OK
Check 11-14 Tie Forces	371.5, 663.0, 1282.9, 875.5 >= 170.0kN	0.46	OK

MasterSeries Sales Team
3 Castle Street
Carrickfergus
Co. Antrim BT38 7BE
Tel : 028 9036 5950

10002

Job Ref	: 1472
Sheet	: C / 744
Made by	: Tommy White
Date	: 04 August 2017 / Ver. 2017.08
Checked	:
Approved	:

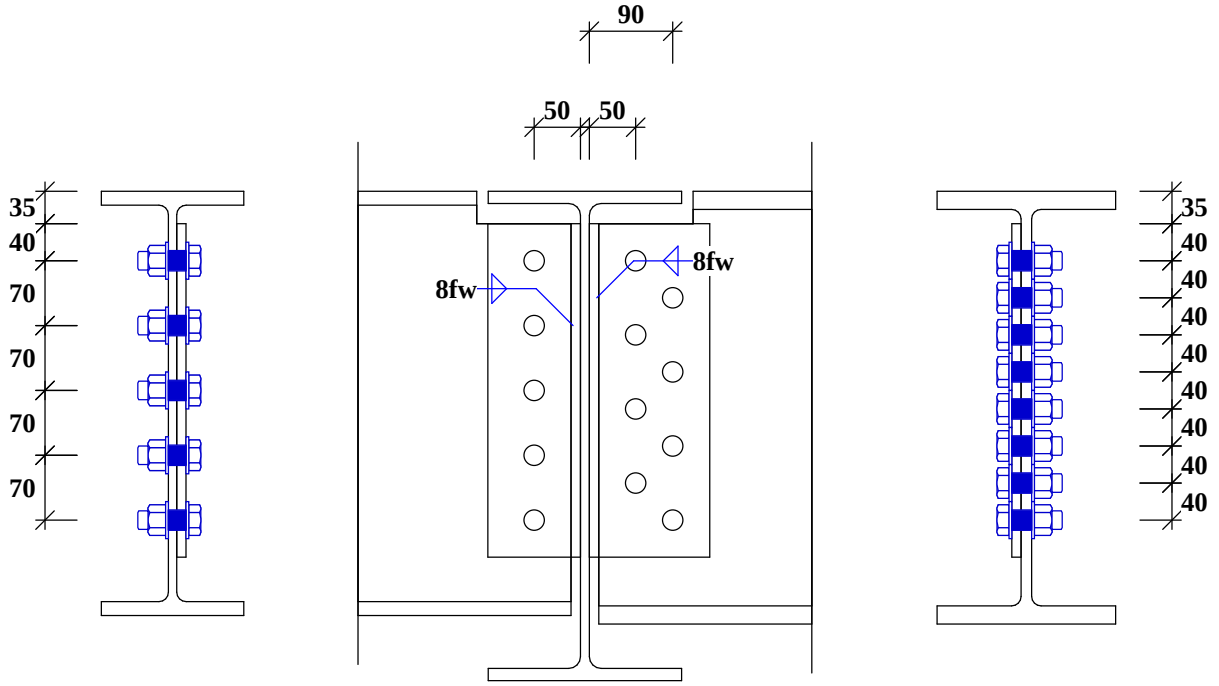

Left: 457x152 UB 67 [S275]
Top Notch: 35 x 102 mm lg. net
Plate: 10 x 100 x 360 mm dp. (3 kg)
With 5 No. 22 mm holes
For 20 mm Ø Grade 8.8 Bolts.

Beam: 533x210 UB 82 [S275]
Beam to web gap 10 mm
Fin-Plates S 275

Right: 457x191 UB 98 [S275]
Top Notch: 35 x 102 mm lg. net
Plate: 10 x 130 x 360 mm dp. (4 kg)
With 8 No. 22 mm holes
For 20 mm Ø Grade 8.8 Bolts.

Beam to Beam Fin-Plate
Beam to Beam Fin-plate Connection to EC 3 (UK NAD)
Basic Data

User Defined Applied Forces at Interface

Shear Forces	Left = 250.0 kN, Right = 120.0 kN
Tie Force	75.0 kN
Design to	EC 3: Part 1-8: 2005 Design of Joints

Basic Dimensions

Left-457x152UB67 [28]	D=458.0, B=153.8, T=15.0, t=9.0, r=10.2, py=275
Supporting-533x210UB82 [28]	D=528.3, B=208.8, T=13.2, t=9.6, r=12.7, py=275
Right-457x191UB98 [28]	D=467.2, B=192.8, T=19.6, t=11.4, r=10.2, py=265
Bolts 20 mm Ø in 22 mm holes	Grade 8.8 Bolts
Plates S 275	All weld grades provided to suit minimum connected steel grade

Summary of Results (Unity Ratios)

Left Hand Beam

Check 1 Detailing Practice	1.00	1.00	OK
Check 2: Bolt Shear & Bearing	0.65, 0.58, 0.69	0.69	OK
Check 3: Sup.Beam Connect Elmts.	0.56, 0.46, 0.59, 0.21	0.59	OK
Check 4: Supported Beam Resist.	0.40, 0.40, 0.69	0.69	OK
Check 5: Notch Resistance	0.40	0.40	OK
Check 6: Notch Stability	0.22	0.22	OK
Check 8: Welds	0.890.89	0.89	OK
Check 10: Supporting Member	0.34	0.34	OK
Check 11: Structural integrity-Plate	0.28, 0.30, 0.30, 0.5, 0.4	0.50	OK
Check 12: Structural integrity-Beam	0.32, 0.34, 0.26, 0.5	0.50	OK

Software produced by www.MasterSeries.com © Civil and Structural Computer Services Limited.

MasterSeries Sales Team
3 Castle Street
Carrickfergus
Co. Antrim BT38 7BE
Tel : 028 9036 5950

10002

Job Ref : **1472**
Sheet : **C / 745**
Made by : **Tommy White**
Date : **04 August 2017 / Ver. 2017.08**
Checked :
Approved :

Right Hand Beam

Check 1 Detailing Practice	1.00	1.00	OK
Check 2: Bolt Shear & Bearing	0.19, 0.92, 0.81	0.92	OK
Check 3: Sup.Beam Connect Elmts.	0.27, 0.30, 0.36, 0.14, 0.10	0.36	OK
Check 4: Supported Beam Resist.	0.16, 0.19, 0.32, 0.07	0.32	OK
Check 5: Notch Resistance	0.16	0.16	OK
Check 6: Notch Stability	0.22	0.22	OK
Check 8: Welds	0.890.89	0.89	OK
Check 11: Structural integrity-Plate	0.18, 0.19, 0.19, 0.1, 0.7	0.70	OK
Check 12: Structural integrity-Beam	0.16, 0.17, 0.12, 0.6	0.60	OK

MasterSeries Sales Team
3 Castle Street
Carrickfergus
Co. Antrim BT38 7BE
Tel : 028 9036 5950

10002

Job Ref	**: 1472**
Sheet	**: C / 747**
Made by	**: Tommy White**
Date	**: 04 August 2017 / Ver. 2017.08**
Checked	**:**
Approved	**:**

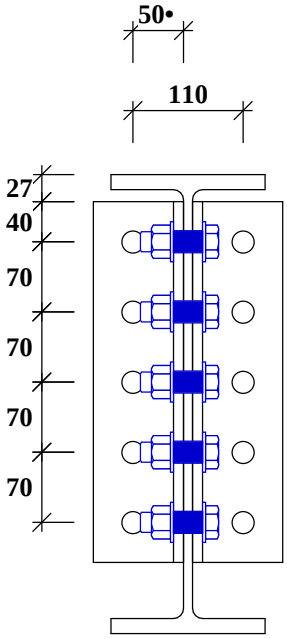

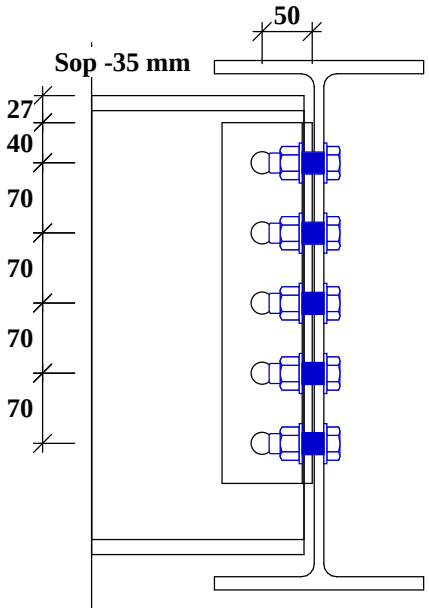

Left: 457x152 UB 67 [S275]
2 No. 90 x 90 x 10 L x 360 mm (2x5 kg)
With 5 No. 22 mm holes in webs
and 5 No. 22 mm holes in toes
For 15 No. 20 mm Ø Grade 8.8 Bolts.

Beam: 533x210 UB 82 [S275]
Beam to web gap 10 mm
Web to cleat gap 2 mm
Cleats grade: S 275

Beam to Beam Angle Cleats
Beam to Beam Angle Cleat Connection to EC 3 (UK NAD)
Basic Data

User Defined Applied Forces at Interface

Shear Forces	Left = 200.0 kN, Right = 0.0 kN
Tie Force	75.0 kN
Design to	EC 3: Part 1-8: 2005 Design of Joints

Basic Dimensions

Left-457x152UB67 [28]	D=458.0, B=153.8, T=15.0, t=9.0, r=10.2, py=275
Supporting-533x210UB82 [28]	D=528.3, B=208.8, T=13.2, t=9.6, r=12.7, py=275
Bolts 20 mm Ø in 22 mm holes	Grade 8.8 Bolts
Plates S 275	All weld grades provided to suit minimum connected steel grade
Cleat Annotation	(Web) - Area of Cleats adjacent to supported beam web (like a fin-plate)
	(Toe) - Area of Cleats Perpendicular to supported beam web (like an end-plate)

Summary of Results (Unity Ratios)

Left Hand Beam

Checks 8 & 9 Bearing & Shear (Toes)	752.6, 589.1, 752.6, 1076.0, 914.2 >= 200.0kN	0.34	OK
Check 10 Shear (Toes)	617.3, 609.4 >= 100.0kN	0.16	OK
Tie checks	0.58, 0.39, 0.58, 0.52	0.58	OK
Check 2: Bolt Shear & Bearing (web)	0.26, 0.25, 0.46	0.46	OK
Check 3: Sup.Beam Connect Elmts. (web)	0.22, 0.19, 0.25, 0.08	0.25	OK
Check 4: Shear & Bending (web)	0.29, 0.27, 0.21	0.29	OK

MasterSeries Sales Team
3 Castle Street
Carrickfergus
Co. Antrim BT38 7BE
Tel : 028 9036 5950

10002

Job Ref	: 1472
Sheet	: C / 749
Made by	: Tommy White
Date	: 04 August 2017 / Ver. 2017.08
Checked	:
Approved	:

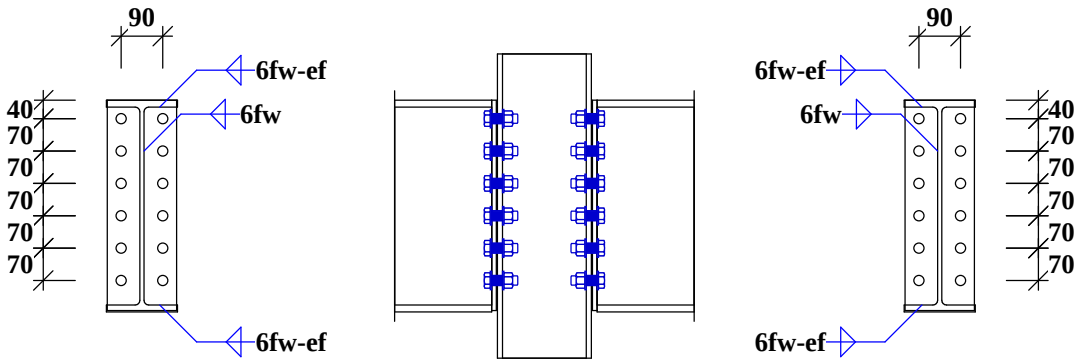

Beam 1: 457x152 UB 67 [S275]
Plate: 10 x 150 x 455 mm dp. (5 kg)
With 12 No. 22 mm holes
For 20 mm Ø Grade 8.8 Bolts.

Column: 203x203 UC 46 [S 275]
End-Plates S 275

Beam 2: 457x152 UB 67 [S275]
Plate: 10 x 150 x 455 mm dp. (5 kg)
With 12 No. 22 mm holes
For 20 mm Ø Grade 8.8 Bolts.

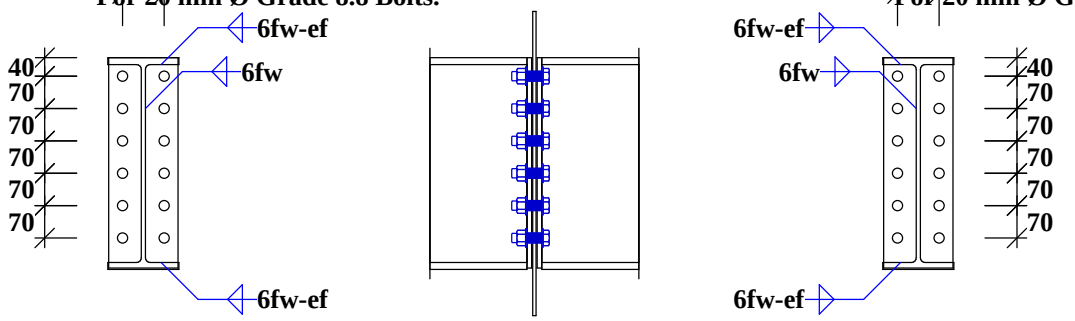

Beam 1: 457x152 UB 67 [S275]
Plate: 10 x 150 x 455 mm dp. (5 kg)
With 12 No. 22 mm holes
For 20 mm Ø Grade 8.8 Bolts.

Beam 2: 457x152 UB 67 [S275]
Plate: 10 x 150 x 455 mm dp. (5 kg)
With 12 No. 22 mm holes
For 20 mm Ø Grade 8.8 Bolts.

Beam to Column Flexible End-Plate
Beam to Column Flexible End-plate Connection to EC 3 (UK NAD)
Basic Data

User Defined Applied Forces at Interface

Shear Forces	Flange 1 = 375.0 kN, Web 1 = 275.0 kN
	Flange 2 = 375.0 kN, Web 2 = 375.0 kN
Tie Forces	Flanges = 75.0 kN, Webs = 75.0 kN
Design to	EC 3: Part 1-8: 2005 Design of Joints

Basic Dimensions

Flange 1-457x152UB67 [28]	D=458.0, B=153.8, T=15.0, t=9.0, r=10.2, py=275
Flange 2-457x152UB67 [28]	D=458.0, B=153.8, T=15.0, t=9.0, r=10.2, py=275
Web 1-457x152UB67 [28]	D=458.0, B=153.8, T=15.0, t=9.0, r=10.2, py=275
Web 2-457x152UB67 [28]	D=458.0, B=153.8, T=15.0, t=9.0, r=10.2, py=275
Column -203x203UC46 [28]	D=203.2, B=203.6, T=11.0, t=7.2, r=10.2, py=275
Bolts 20 mm Ø in 22 mm holes	Grade 8.8 Bolts
Plates S 275	All weld grades provided to suit minimum connected steel grade

MasterSeries Sales Team
10002
3 Castle Street
Carrickfergus
Co. Antrim BT38 7BE
Tel : 028 9036 5950

Job Ref : **1472**
Sheet : **C / 750**
Made by : **Tommy White**
Date : **04 August 2017 / Ver. 2017.08**
Checked :
Approved :

Summary of Results (Unity Ratios)

Checks for Flange Beams 1 & 2

Check 4 Supported Beam Web Shear	695.7 >= 375.0kN	0.54	OK
Checks 1 & 2 Detailing Practice	1.00, 0.83, 1.00, 0.64, 0.56, 0.710.86	1.00	OK
Check 8 Bearing	903.2, 903.2, 903.2 >= 375.0kN	0.42	OK
Check 10 Shear	864.5, 859.3 >= 187.5kN	0.22	OK
Check 11-14 Tie Forces	751.1, 1041.9, 1924.4, 919.8, 1236.1, 1435.7, 602.3 >= 375.0kN	0.62	OK

Checks for Web Beams 1 & 2

Check 4 Supported Beam Web Shear	695.7 >= 375.0kN	0.54	OK
Checks 1 & 2 Detailing Practice	1.00, 0.83, 1.00, 0.64, 0.56, 0.710.86	1.00	OK
Check 8 Bearing	903.2, 903.2, 903.2 >= 375.0kN	0.42	OK
Check 10 Shear	565.9, 562.4 >= 325.0kN	0.58	OK
Check 10 Combined Bearing	95.7 >= 54.2kN	0.57	OK
Check 14 Tie Forces Col Web	236.2 >= 100.0kN	0.42	OK
Check 11-13 Tie Forces	751.1, 1041.9, 1924.4, 1435.7, 602.3 >= 375.0kN	0.62	OK

MasterSeries Sales Team
3 Castle Street
Carrickfergus
Co. Antrim BT38 7BE
Tel : 028 9036 5950

10002

Job Ref	: 1472
Sheet	: C / 752
Made by	: Tommy White
Date	: 04 August 2017 / Ver. 2017.08
Checked	:
Approved	:

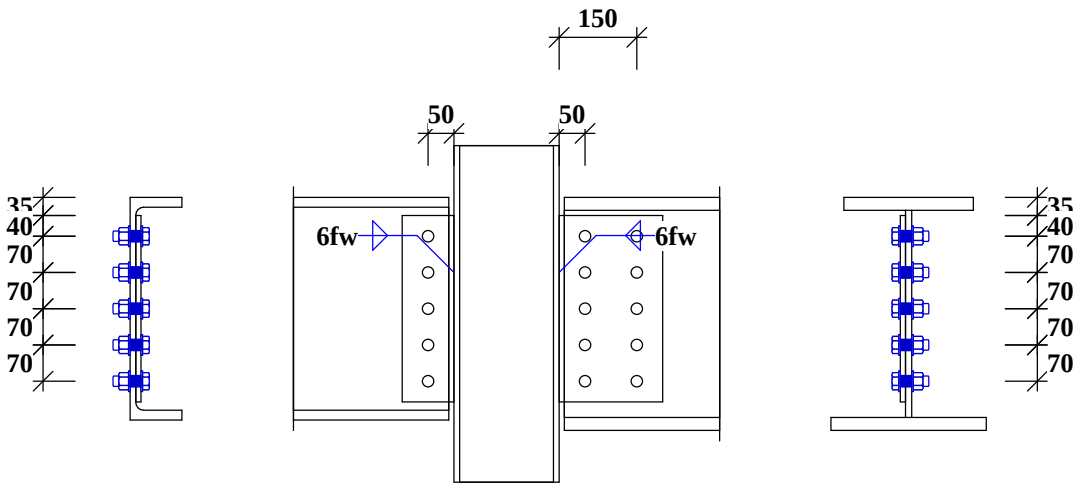

Beam 1: 430x100 PFC [S275]
Beam to Column Gap 10 mm
Plate: 10 x 100 x 360 mm dp. (
With 5 No. 22 mm holes
For 20 mm Ø Grade 8.8 Bolts.

Column: 203x203 UC 46 [S 275]
Fin-Plates S 275

Beam 2: 250x25T+300x25B+400x12WPg14
Beam to Column Gap 10 mm
Plate: 10 x 200 x 360 mm dp. (6 kg)
With 10 No. 22 mm holes
For 20 mm Ø Grade 8.8 Bolts.

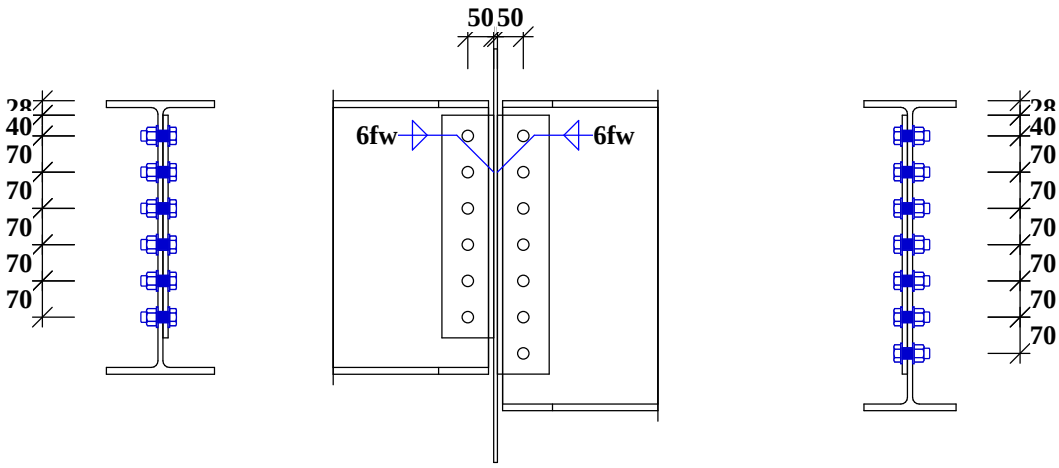

Beam 1: 533x210 UB 82 [S275]
Beam to Column Gap 10 mm
Plate: 10 x 100 x 430 mm dp. (3 kg)
With 6 No. 22 mm holes
For 20 mm Ø Grade 8.8 Bolts.

Beam 2: 610x178 UB 82 [S275]
Beam to Column Gap 10 mm
Plate: 10 x 100 x 500 mm dp. (4 kg)
With 7 No. 22 mm holes
For 20 mm Ø Grade 8.8 Bolts.

MasterSeries Sales Team
3 Castle Street
Carrickfergus
Co. Antrim BT38 7BE
Tel : 028 9036 5950

10002

Job Ref	**: 1472**
Sheet	**: C / 753**
Made by	**: Tommy White**
Date	**: 04 August 2017 / Ver. 2017.08**
Checked	**:**
Approved	**:**

Beam to Column Fin-Plate
Beam to Column Fin-plate Connection to EC 3 (UK NAD)
Basic Data

User Defined Applied Forces at Interface

Shear Forces	Flange 1 = 200.0 kN, Web 1 = 200.0 kN
	Flange 2 = 0.0 kN, Web 2 = 0.0 kN
Tie Forces	Flanges = 75.0 kN, Webs = 75.0 kN
Design to	EC 3: Part 1-8: 2005 Design of Joints

Basic Dimensions

Flange 1-430x100PFC [28]	D=430.0, B=100.0, T=19.0, t=11.0, r=15.0, py=265
Flange 2-250x25T+300x25B+400x12WPg145.62 [28]	
	D=450.0, B=250.0, B_2=300.0, T=25.0, t=12.0, py=265
Web 1-533x210UB82 [28]	D=528.3, B=208.8, T=13.2, t=9.6, r=12.7, py=275
Web 2-610x178UB82 [28]	D=598.6, B=177.9, T=12.8, t=10.0, r=12.7, py=275
Column -203x203UC46 [28]	D=203.2, B=203.6, T=11.0, t=7.2, r=10.2, py=275
Bolts 20 mm Ø in 22 mm holes	Grade 8.8 Bolts
Plates S 275	All weld grades provided to suit minimum connected steel grade

Summary of Results (Unity Ratios)

Checks for Flange Beam on Side 1

Check 1 Detailing Practice	1.00	1.00	OK
Check 2: Bolt Shear & Bearing	0.52, 0.46, 0.38	0.52	OK
Check 3: Sup.Beam Connect Elmts.	0.44, 0.37, 0.47, 0.17	0.47	OK
Check 4: Shear & Bending	0.25, 0.23, 0.18	0.25	OK
Check 8: Welds	1.191.19	1.19	**Warning**
Check 10: Supporting Member	0.16, 0.13	0.16	OK
Check 11: Structural integrity-Plate	0.23, 0.24, 0.24, 0.4, 0.3	0.40	OK
Check 12: Structural integrity-Beam	0.24, 0.23, 0.17, 0.3	0.30	OK

Checks for Flange Beam on Side 2

Checks for Web Beam on Side 1

Check 1 Detailing Practice	1.00	1.00	OK
Check 2: Bolt Shear & Bearing	0.42, 0.37, 0.34	0.42	OK
Check 3: Sup.Beam Connect Elmts.	0.37, 0.31, 0.40, 0.12	0.40	OK
Check 4: Shear & Bending	0.23, 0.22, 0.13	0.23	OK
Check 8: Welds	1.191.19	1.19	**Warning**
Check 10: Supporting Member	0.20, 0.14	0.20	OK
Check 11: Structural integrity-Plate	0.19, 0.20, 0.20, 0.3, 0.2	0.30	OK
Check 12: Structural integrity-Beam	0.19, 0.21, 0.16, 0.3	0.30	OK

Checks for Web Beam on Side 2

MasterSeries Sales Team
3 Castle Street
Carrickfergus
Co. Antrim BT38 7BE
Tel : 028 9036 5950

10002

Job Ref	**: 1472**
Sheet	**: C / 755**
Made by	**: Tommy White**
Date	**: 04 August 2017 / Ver. 2017.08**
Checked	**:**
Approved	**:**

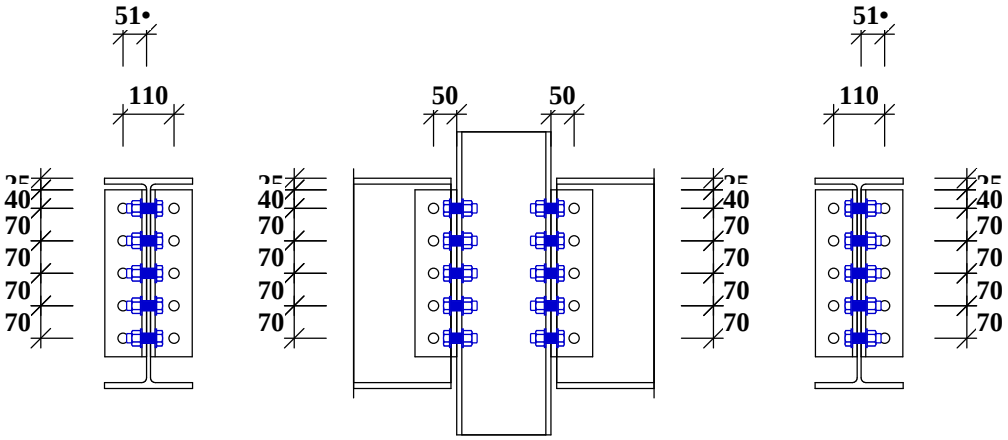

Beam 1: 457x191 UB 67 [S275]
2 No. 90 x 90 x 10 L x 360 mm
With 5 No. 22 mm holes in webs
and 5 No. 22 mm holes in toes
For 15 No. 20 mm Ø Grade 4.8 Bolts.

Column: 203x203 UC 46 [S 275]
Angle Cleats S 275

Beam 2: 457x191 UB 67 [S275]
2 No. 90 x 90 x 10 L x 360 mm (2x5 kg)
With 5 No. 22 mm holes in webs
and 5 No. 22 mm holes in toes
For 15 No. 20 mm Ø Grade 4.8 Bolts.

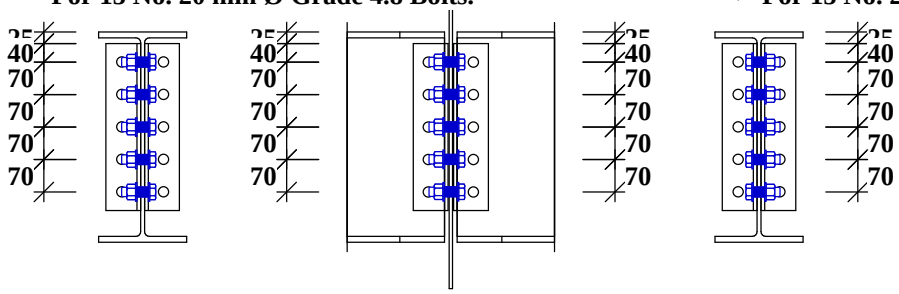

Beam 1: 457x191 UB 67 [S275]
2 No. 75 x 75 x 8 L x 360 mm (2x3 kg)
With 5 No. 22 mm holes in webs
and 5 No. 22 mm holes in toes
For 15 No. 20 mm Ø Grade 4.8 Bolts.

Beam 2: 457x191 UB 67 [S275]
2 No. 75 x 75 x 8 L x 360 mm (2x3 kg)
With 5 No. 22 mm holes in webs
and 5 No. 22 mm holes in toes
For 15 No. 20 mm Ø Grade 4.8 Bolts.

Beam to Column Angle Cleat
Beam to Column Angle Cleat Connection to EC 3 (UK NAD)
Basic Data

User Defined Applied Forces at Interface

Shear Forces	Flange 1 = 200.0 kN, Flange 2 = 200.0 kN
Tie Forces	75.0 kN
Design to	EC 3: Part 1-8: 2005 Design of Joints

Basic Dimensions

Flange 1-457x191UB67 [28]	D=453.4, B=189.9, T=12.7, t=8.5, r=10.2, py=275
Flange 2-457x191UB67 [28]	D=453.4, B=189.9, T=12.7, t=8.5, r=10.2, py=275
Web 1-457x191UB67 [28]	D=453.4, B=189.9, T=12.7, t=8.5, r=10.2, py=275
Web 2-457x191UB67 [28]	D=453.4, B=189.9, T=12.7, t=8.5, r=10.2, py=275
Column -203x203UC46 [28]	D=203.2, B=203.6, T=11.0, t=7.2, r=10.2, py=275
Bolts 20 mm Ø in 22 mm holes	Grade 4.8 Bolts
Plates S 275	All weld grades provided to suit minimum connected steel grade
Cleat Annotation	(Web) - Area of Cleats adjacent to supported beam web (like a fin-plate)
	(Toe) - Area of Cleats Perpendicular to supported beam web (like an end-plate)

MasterSeries Sales Team
3 Castle Street
Carrickfergus
Co. Antrim BT38 7BE
Tel : 028 9036 5950

10002

Job Ref : **1472**
Sheet : **C / 756**
Made by : **Tommy White**
Date : **04 August 2017 / Ver. 2017.08**
Checked :
Approved :

Summary of Results (Unity Ratios)

Checks for Flange Beams 1 & 2

Checks 8 & 9 Bearing & Shear (Toes)	313.6, 313.6, 313.6, 1076.0, 912.4 >= 200.0kN	0.64	OK
Check 10 Shear (Toes)	707.3, 698.3 >= 100.0kN	0.14	OK
Tie checks	0.59, 0.41, 0.61, 0.52	0.61	OK
Check 2: Bolt Shear & Bearing (web)	0.63, 0.25, 0.49	0.63	OK
Check 3: Sup.Beam Connect Elmts. (web)	0.22, 0.19, 0.25, 0.08	0.25	OK
Check 4: Shear & Bending (web)	0.31, 0.29, 0.22	0.31	OK

Checks for Web Beams 1 & 2

10002

1 Eaves Joint

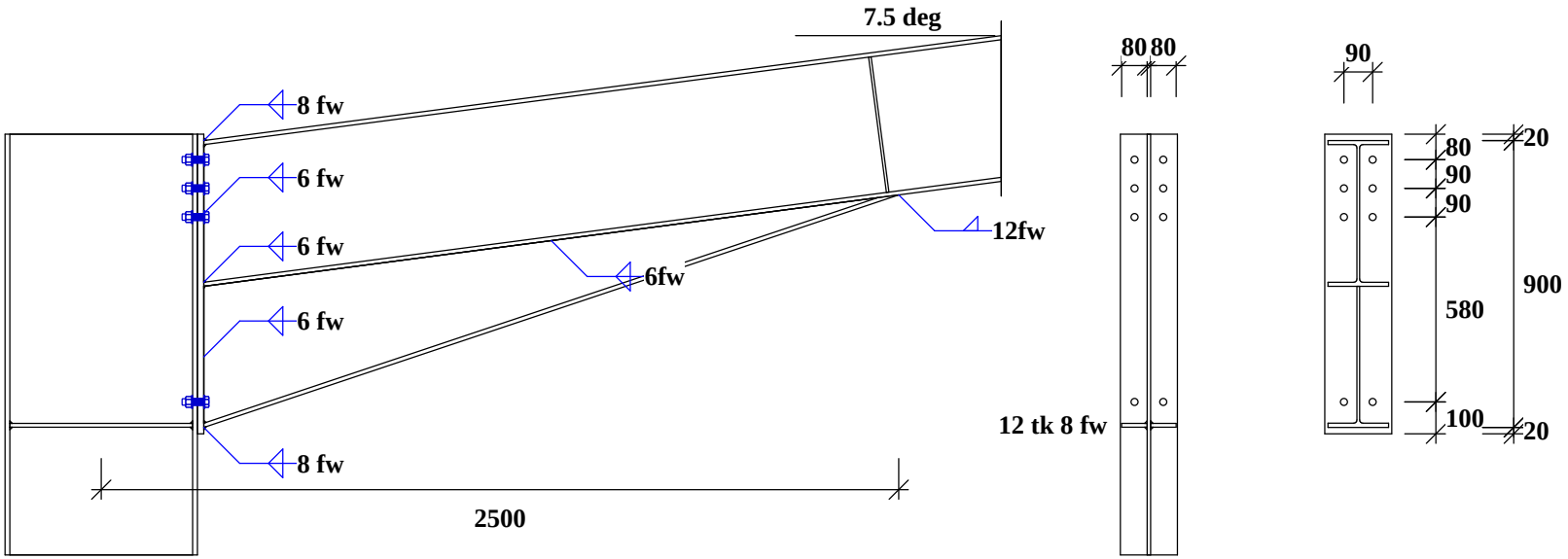

Plates S 275
Beam 457x191 UB 67 [S275]
Haunch 457x191 UB 67 [S275]

Column 610x178 UB 92 [S275]
Top 20 above top flange
Bot 400 below bottom flange

End-Plate 940 x 210 x 20 mm (31 kg)
8 No. M20 Grade 8.8 Bolts in 22 mm holes
Haunch Stiff 8 mm with 6 FW

1 Eaves Joint

Software produced by www.MasterSeries.com © Civil and Structural Computer Services Limited.

10002

Apex Joint

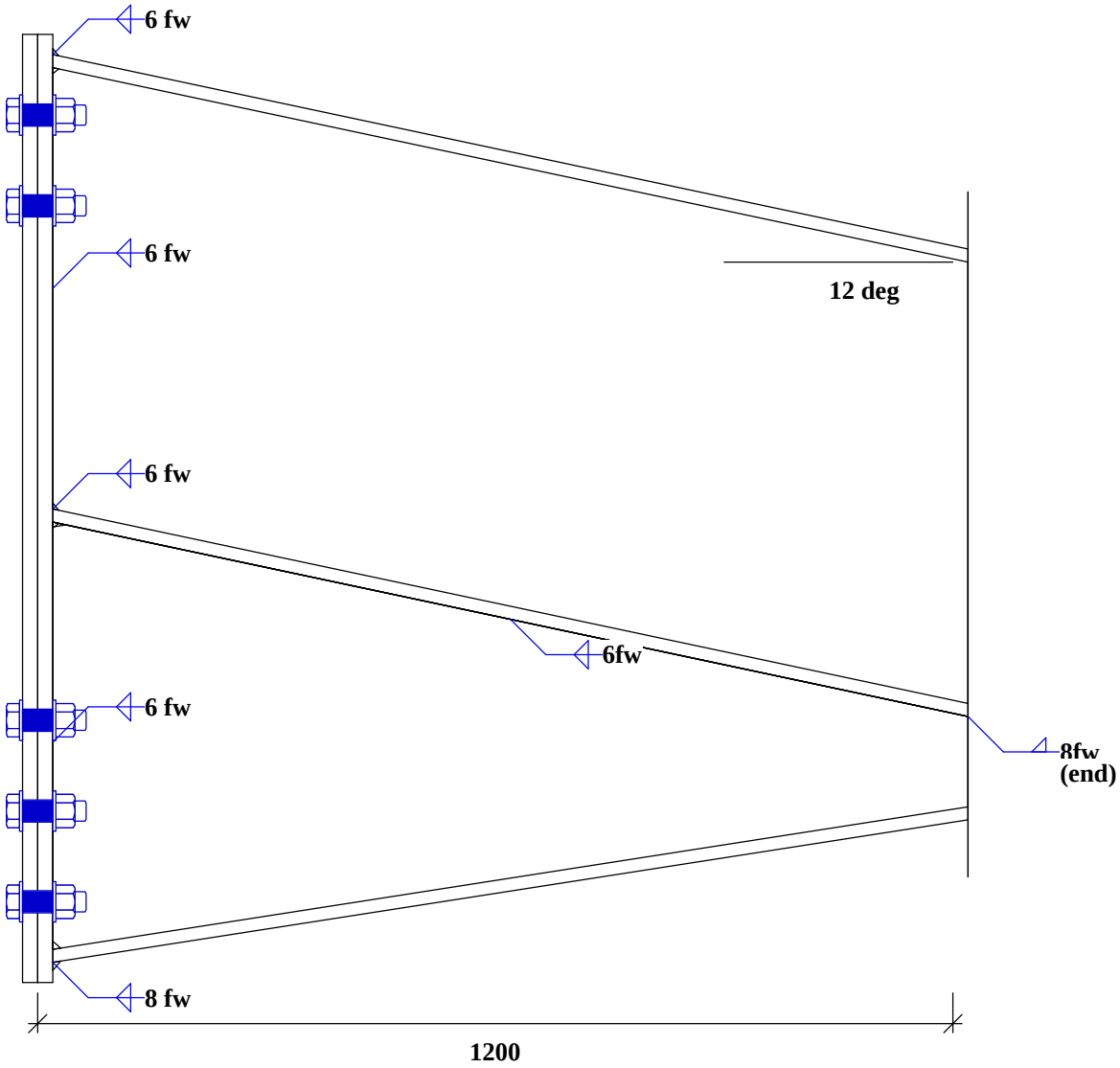

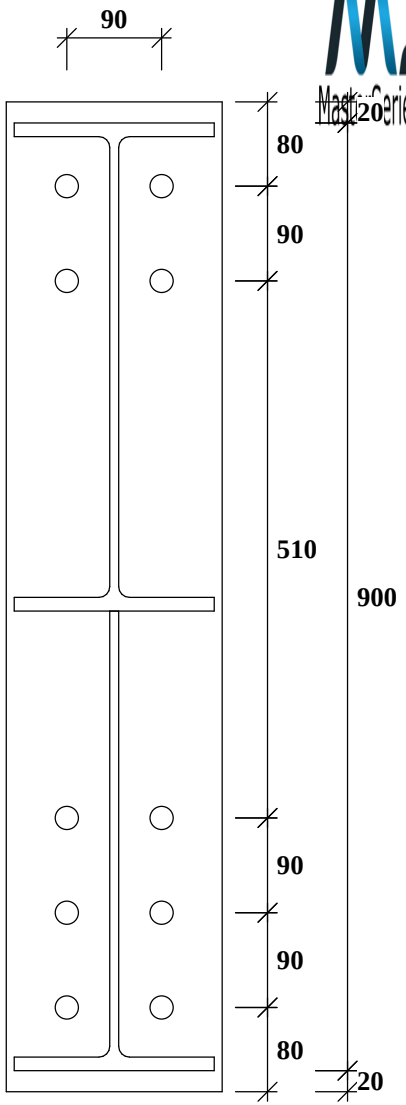

Plates S 275
Beam 457x191 UB 67 [S275]
Haunch 457x191 UB 67 [S275]

Apex Joint

End-Plate 940 x 205 x 15 mm (23 kg)
10 No. M20 Grade 8.8 Bolts in 22 mm holes

Software produced by www.MasterSeries.com © Civil and Structural Computer Services Limited.

10002

End-Plated Splice

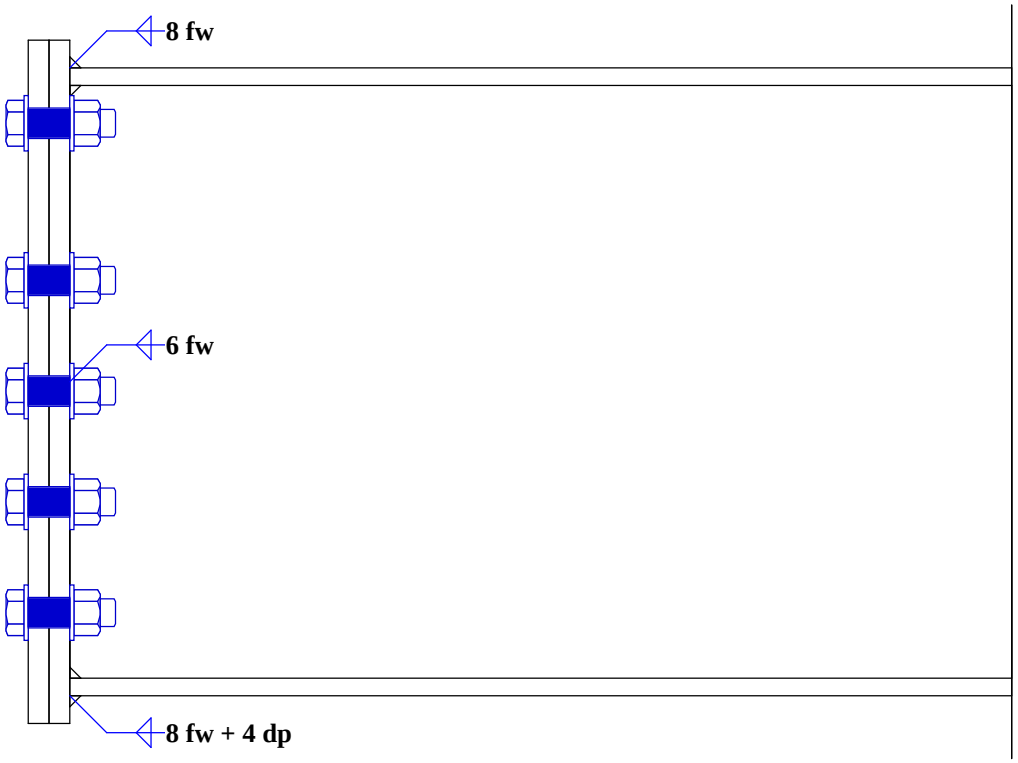

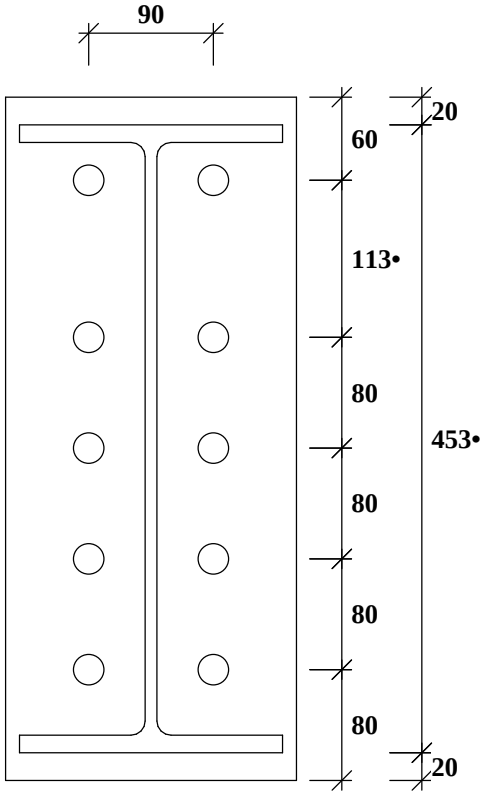

Plates S 275
Beam 457x191 UB 67 [S275]

End-Plate 493 x 210 x 15 mm (12 kg)
10 No. M20 Grade 8.8 Bolts in 22 mm holes

End-Plated Splice

Software produced by www.MasterSeries.com © Civil and Structural Computer Services Limited.

10002

Asymetrical Base-Plate

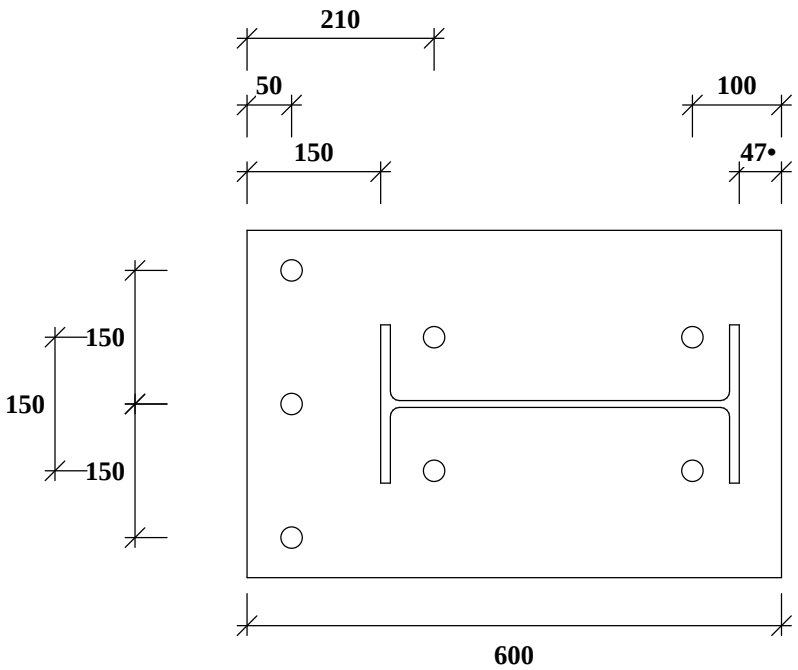

Base-Plate 600 x 390 x 30 mm (55 kg)
With 7 No. 24 mm holes
For 20 mm Grade 8.8 Bolts.

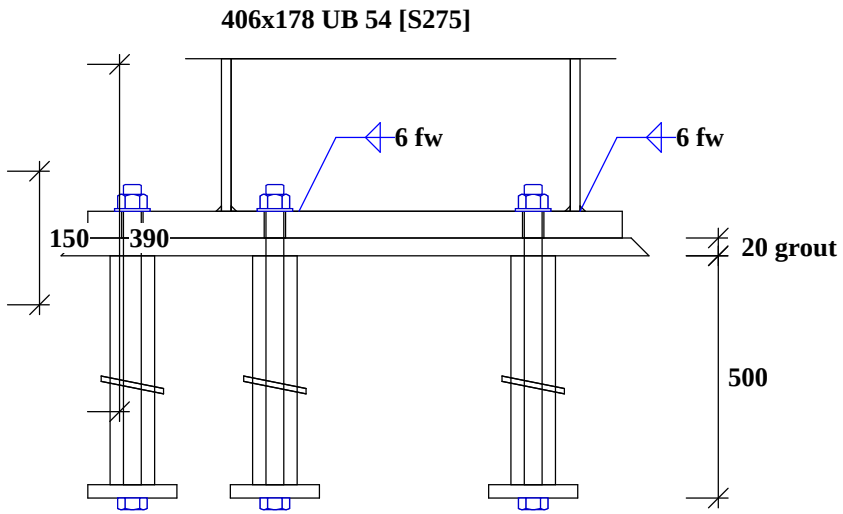

Washers 100 x 100 x 15 mm thick with 50 mm Void
All Plates S 275
Reinforcement 12 @ 200 mm cc each way. Cover 0 mm

Asymetrical Base-Plate

Software produced by www.MasterSeries.com © Civil and Structural Computer Services Limited.

10002

Beam-Splice Outer Plates

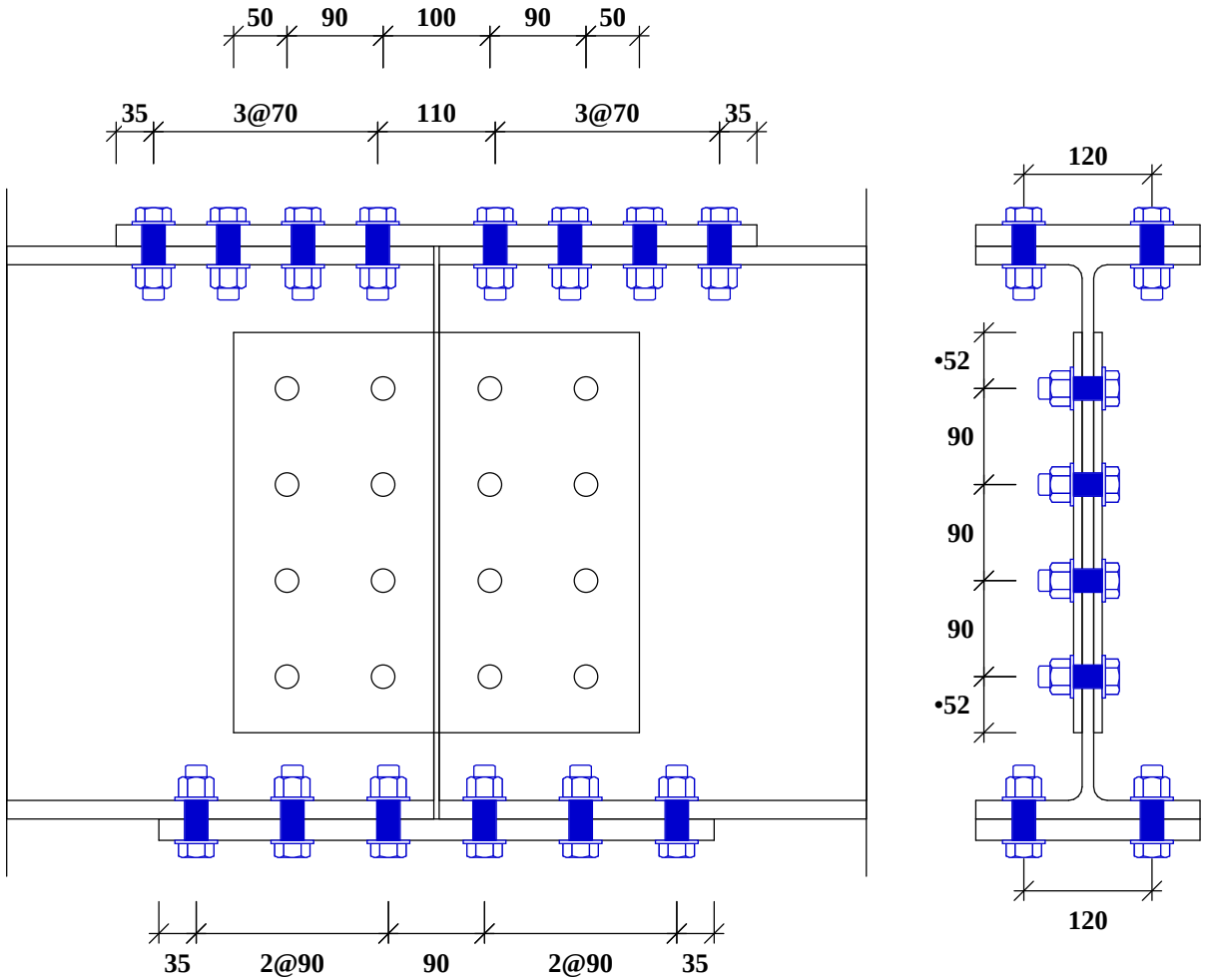

Splice Plates

Top Flange
1 No 600 x 210 x 20 mm (20 kg)

Web
2 No 380 x 375 x 8 mm (2x9 kg)

Bottom Flange
1 No 520 x 210 x 20 mm (17 kg)

HSFG - Pt 2 Bolts (non-slip at service)
44 No. 20 mm Ø Bolts
In 22 mm Holes

Beams 533x210 UB 101 [S275]
All Plates S 275
Beam gap 5 mm

Beam-Splice Outer Plates

Software produced by www.MasterSeries.com © Civil and Structural Computer Services Limited.

10002

Column Splice with division Plate

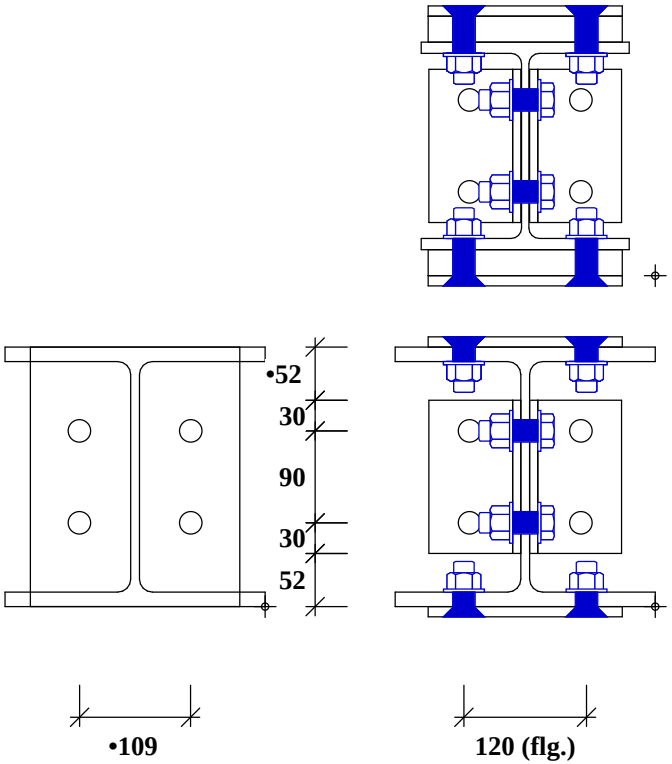

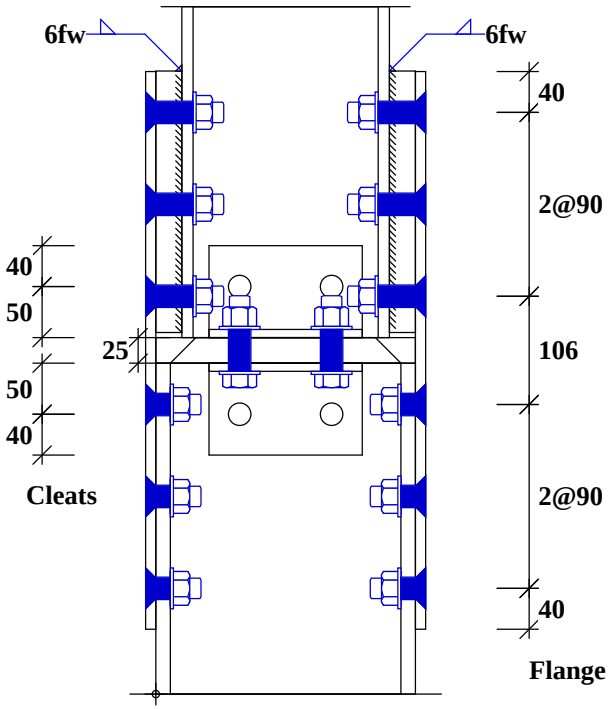

Upper Column 203x203 UC 46 [S275]
Lower Column 254x254 UC 73 [S275]
External Flange Plates
2/546 x 190 x 10 mm (2x8 kg)
External Packers
2/256 x 190 x 25 (aprox) mm (2x10 kg)
Welded to Flange with 6 mm FW (top & sid

Bearing Divider Plate
254 x 205 x 25 mm (10 kg)

Web Angle Cleats
4/90 x 90 x 8 Ang x 150 mm (4x2 kg)
2 bolts per leg. 90 cc with 50 back mark

HSFG - Pt 2 Bolts (non-slip at service)
32 No. 20 mm Ø Bolts
In 22 mm Holes

All Plates S 275
Column Prepared for Direct Bearing

Column Splice with division Plate

Software produced by www.MasterSeries.com © Civil and Structural Computer Services Limited.

10002

CHS Hollow Section Splice

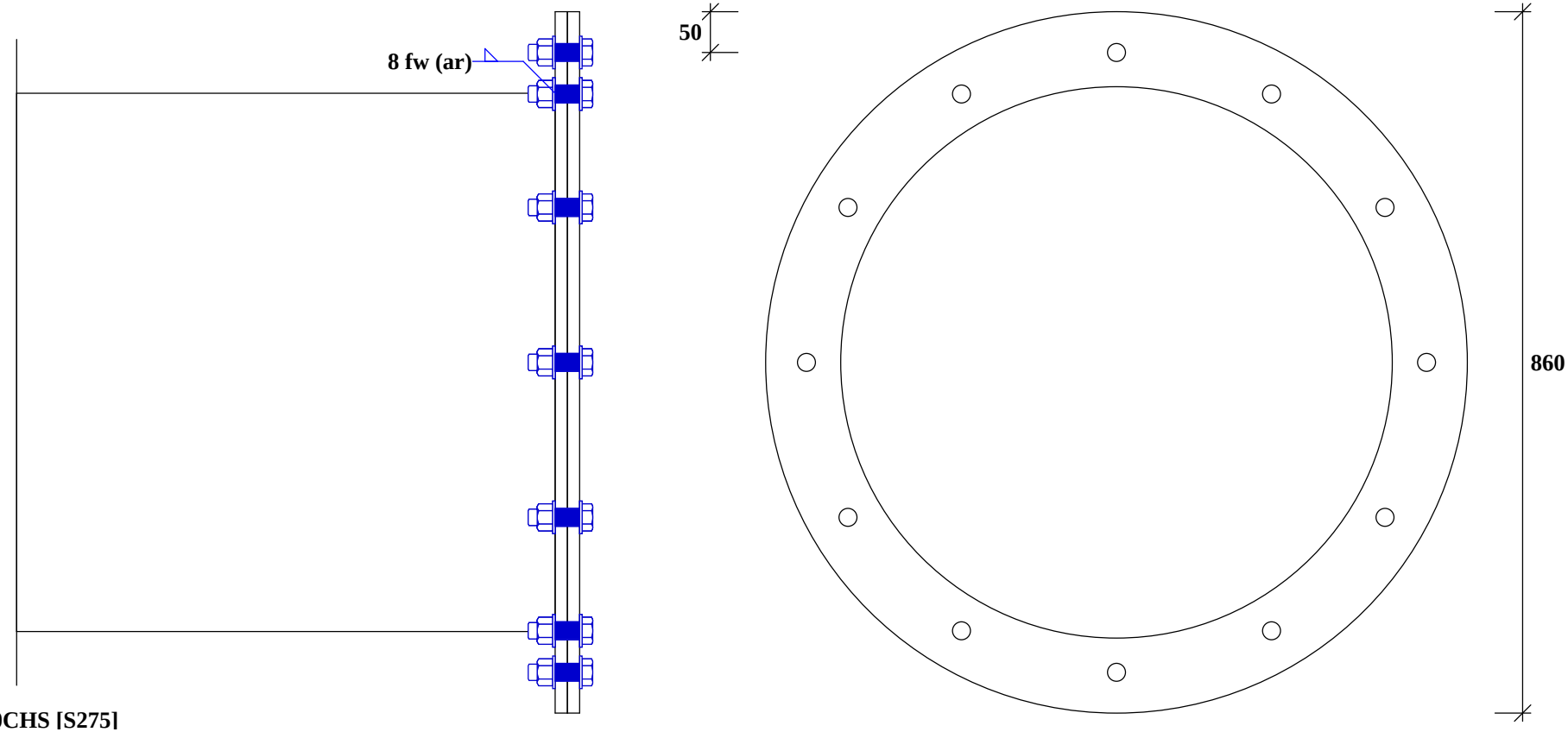

660x20CHS [S275]
End-Plate 860x15 mm (68 kg)
Plates S 275
12 No. M20 Grade 8.8 Bolts in 22 mm holes
On 760 mm PCD

CHS Hollow Section Splice

Software produced by www.MasterSeries.com © Civil and Structural Computer Services Limited.

10002

Beam to Beam Flexible End-Plate - with Asymetrical Plate Girders

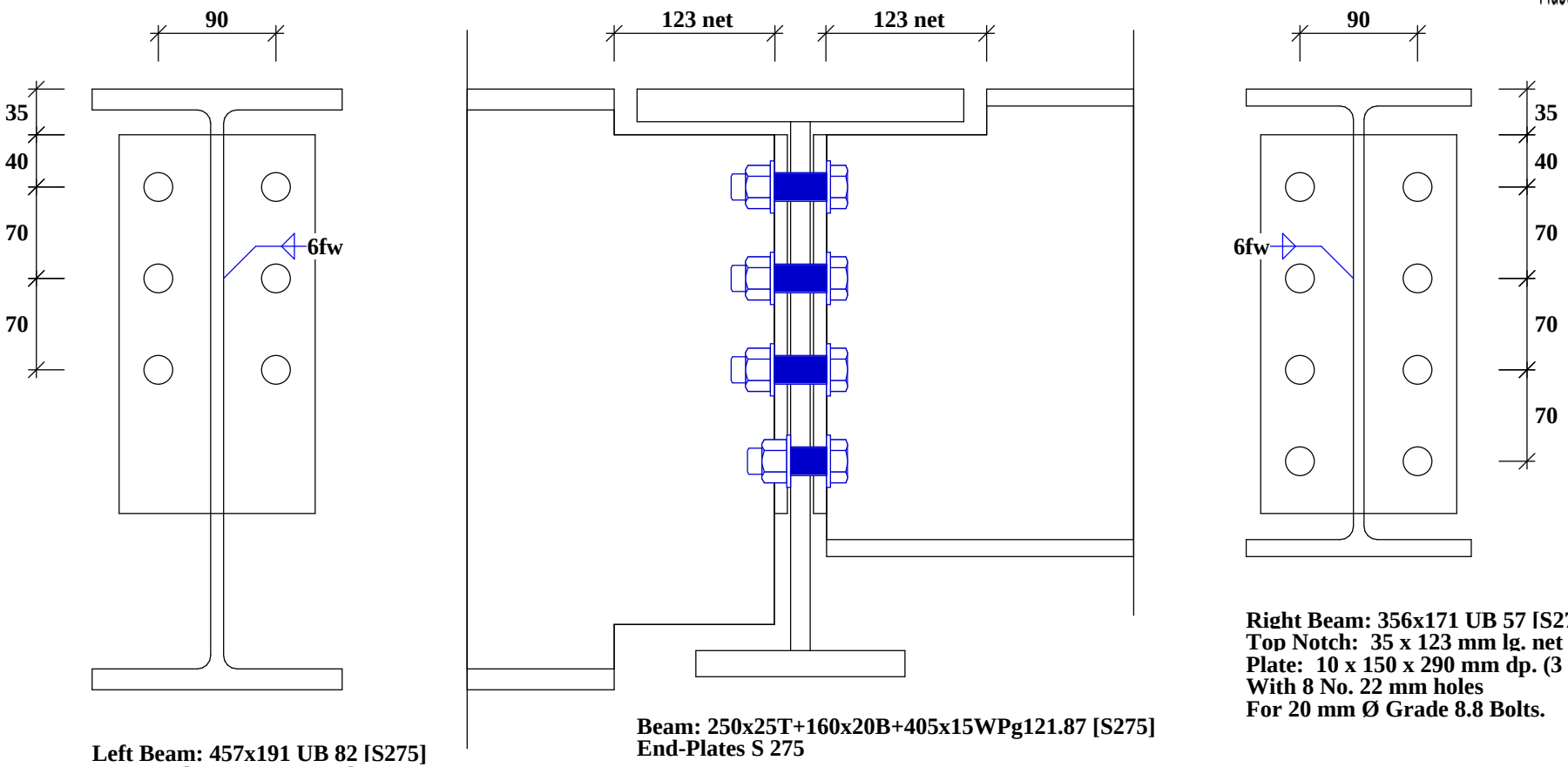

Left Beam: 457x191 UB 82 [S275]
Top Notch: 35 x 123 mm lg. net
Bot Notch: 50 x 123 mm lg. net
Plate: 10 x 150 x 290 mm dp. (3 kg)
With 6 No. 22 mm holes
For 20 mm Ø Grade 8.8 Bolts.

Beam: 250x25T+160x20B+405x15WPg121.87 [S275]
End-Plates S 275

Right Beam: 356x171 UB 57 [S275]
Top Notch: 35 x 123 mm lg. net
Plate: 10 x 150 x 290 mm dp. (3 kg)
With 8 No. 22 mm holes
For 20 mm Ø Grade 8.8 Bolts.

Beam to Beam Flexible End-Plate - with Asymetrical Plate Girders

Software produced by www.MasterSeries.com © Civil and Structural Computer Services Limited.

10002

Beam to Beam Fin-Plate

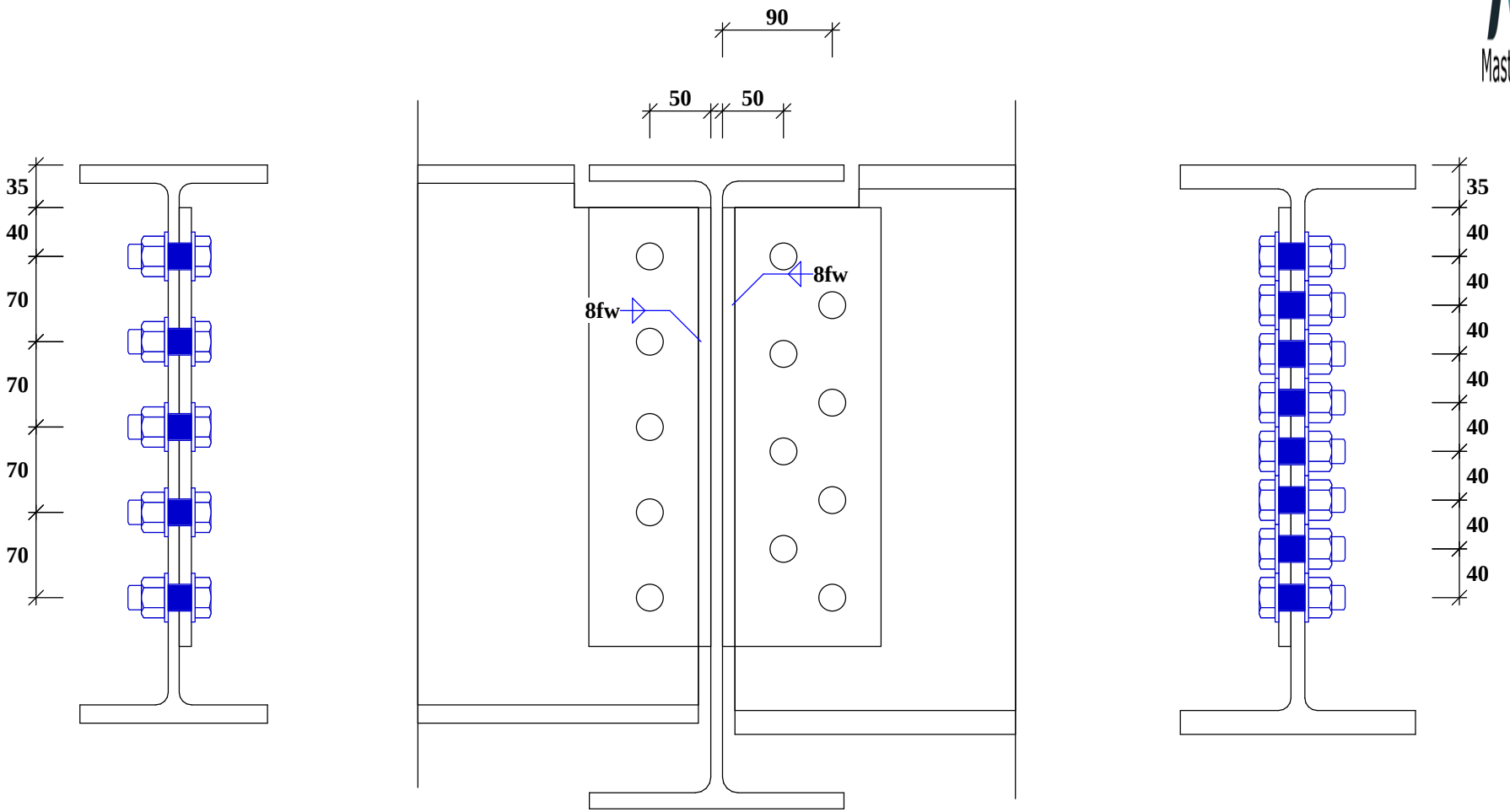

Left: 457x152 UB 67 [S275]
Top Notch: 35 x 102 mm lg. net
Plate: 10 x 100 x 360 mm dp. (3 kg)
With 5 No. 22 mm holes
For 20 mm Ø Grade 8.8 Bolts.

Beam: 533x210 UB 82 [S275]
Beam to web gap 10 mm
Fin-Plates S 275

Right: 457x191 UB 98 [S275]
Top Notch: 35 x 102 mm lg. net
Plate: 10 x 130 x 360 mm dp. (4 kg)
With 8 No. 22 mm holes
For 20 mm Ø Grade 8.8 Bolts.

Beam to Beam Fin-Plate

Software produced by www.MasterSeries.com © Civil and Structural Computer Services Limited.

10002

Beam to Beam Angle Cleats

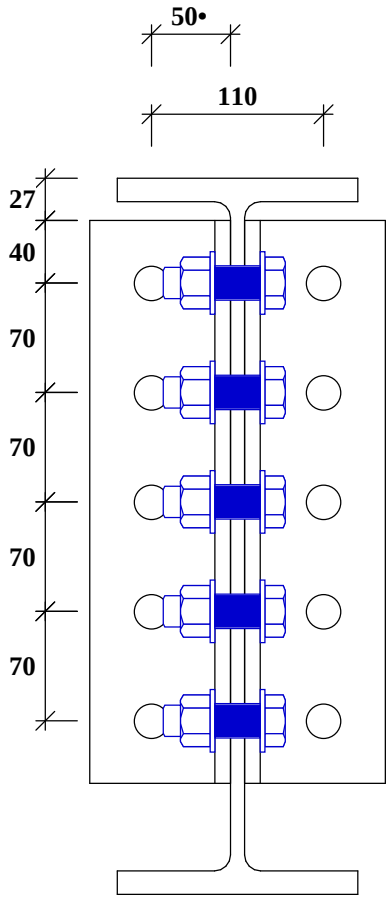

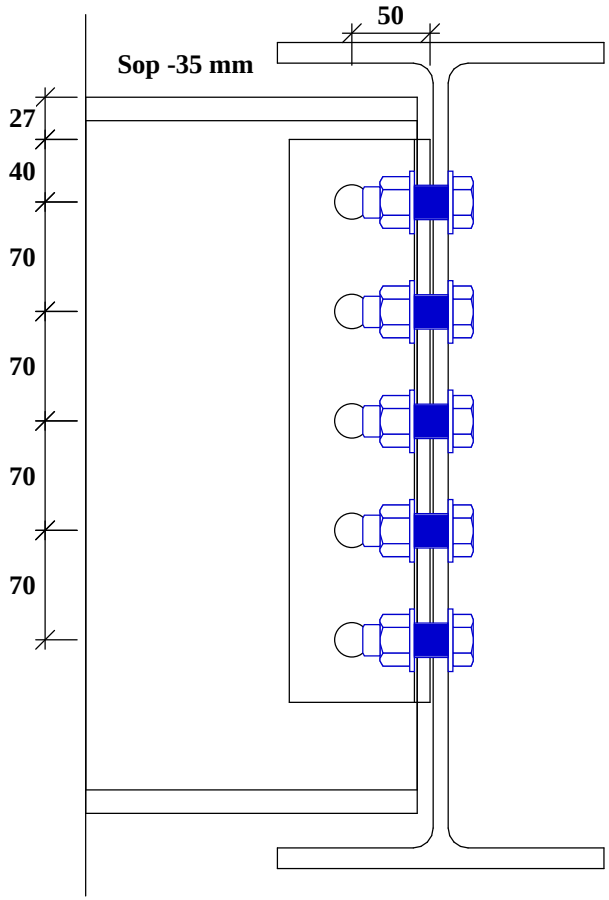

Left: 457x152 UB 67 [S275]
2 No. 90 x 90 x 10 L x 360 mm (2x5 kg)
With 5 No. 22 mm holes in webs
and 5 No. 22 mm holes in toes
For 15 No. 20 mm Ø Grade 8.8 Bolts.

Beam: 533x210 UB 82 [S275]
Beam to web gap 10 mm
Web to cleat gap 2 mm
Cleats grade: S 275

Beam to Beam Angle Cleats

Software produced by www.MasterSeries.com © Civil and Structural Computer Services Limited.

MasterSeries Sales Team
3 Castle Street
Carrickfergus
Co. Antrim BT38 7BE
Tel : 028 9036 5950

10002

Job Ref	: 1472
Sheet	: C / 768
Made by	: Tommy White
Date	: 04 August 2017 / Ver. 2017.08
Checked	:
Approved	:

Beam to Column Flexible End-Plate

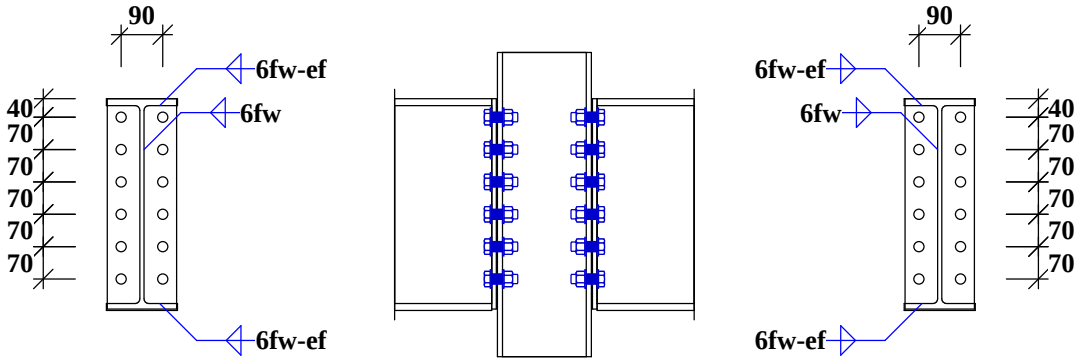

Beam 1: 457x152 UB 67 [S275]
Plate: 10 x 150 x 455 mm dp. (5 kg)
With 12 No. 22 mm holes
For 20 mm Ø Grade 8.8 Bolts.

Column: 203x203 UC 46 [S 275]
End-Plates S 275

Beam 2: 457x152 UB 67 [S275]
Plate: 10 x 150 x 455 mm dp. (5 kg)
With 12 No. 22 mm holes
For 20 mm Ø Grade 8.8 Bolts.

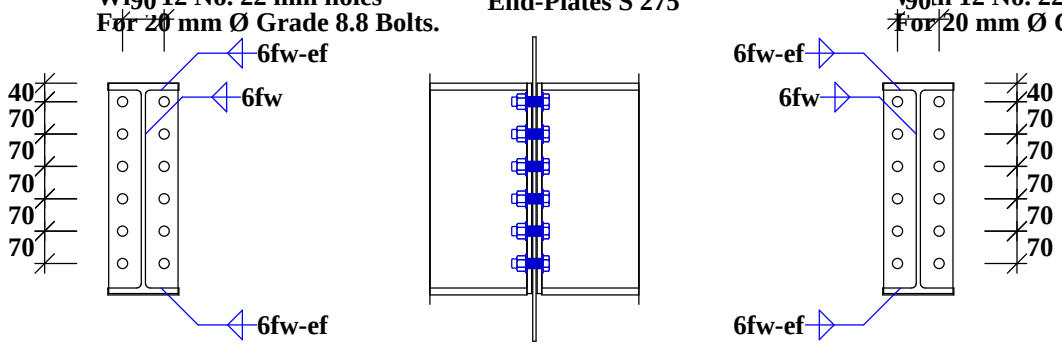

Beam 1: 457x152 UB 67 [S275]
Plate: 10 x 150 x 455 mm dp. (5 kg)
With 12 No. 22 mm holes
For 20 mm Ø Grade 8.8 Bolts.

Beam 2: 457x152 UB 67 [S275]
Plate: 10 x 150 x 455 mm dp. (5 kg)
With 12 No. 22 mm holes
For 20 mm Ø Grade 8.8 Bolts.

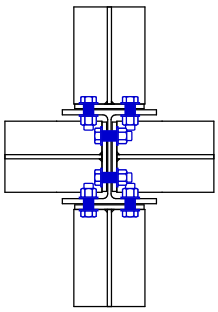

MasterSeries Sales Team
3 Castle Street
Carrickfergus
Co. Antrim BT38 7BE
Tel : 028 9036 5950

10002

Job Ref	: 1472
Sheet	: C / 770
Made by	: Tommy White
Date	: 04 August 2017 / Ver. 2017.08
Checked	:
Approved	:

Beam to Column Fin-Plate

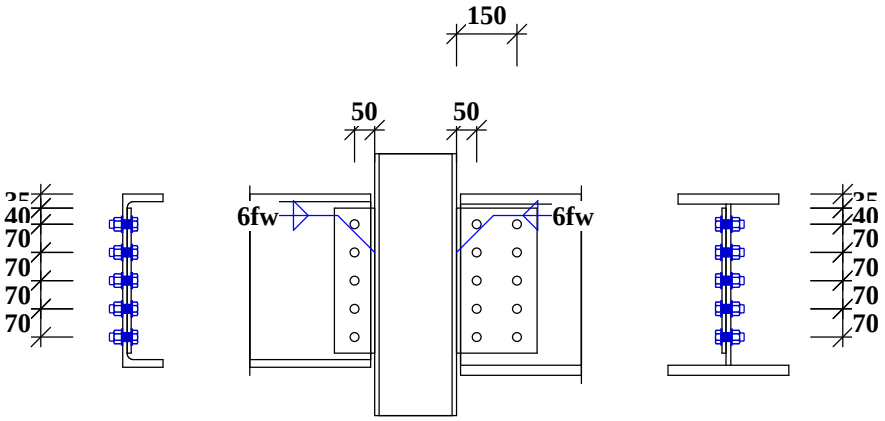

Beam 1: 430x100 PFC [S275]
Beam to Column Gap 1
Plate: 10 x 100 x 360 m
With 5 No. 22 mm holes
For 20 mm Ø Grade 8.8 Bolts.

Column: 203x203 UC 46 [S 275]
Fin-Plates S 275

Beam 2: 250x25T+300x25B+400x12WPg145.62 [S
to Column Gap 10 mm
Plate: 10 x 200 x 360 mm dp. (6 kg)
With 10 No. 22 mm holes
For 20 mm Ø Grade 8.8 Bolts.

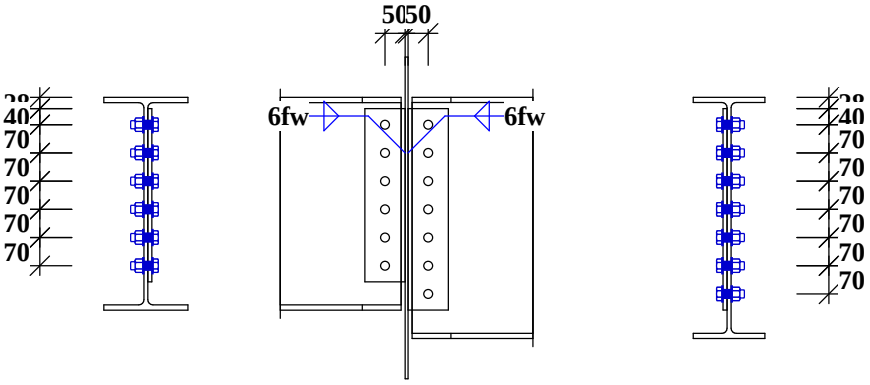

Beam 1: 533x210 UB 82 [S275]
Beam to Column Gap 10 mm
Plate: 10 x 100 x 430 mm dp. (3 kg)
With 6 No. 22 mm holes
For 20 mm Ø Grade 8.8 Bolts.

Beam 2: 610x178 UB 82 [S275]
Beam to Column Gap 10 mm
Plate: 10 x 100 x 500 mm dp. (4 kg)
With 7 No. 22 mm holes
For 20 mm Ø Grade 8.8 Bolts.

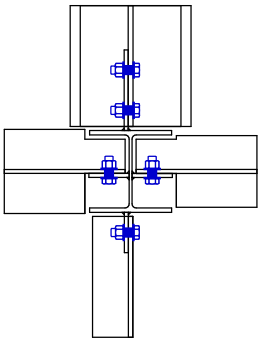

MasterSeries Sales Team
3 Castle Street
Carrickfergus
Co. Antrim BT38 7BE
Tel : 028 9036 5950

10002

Job Ref	: 1472
Sheet	: C / 772
Made by	: Tommy White
Date	: 04 August 2017 / Ver. 2017.08
Checked	:
Approved	:

Beam to Column Angle Cleat

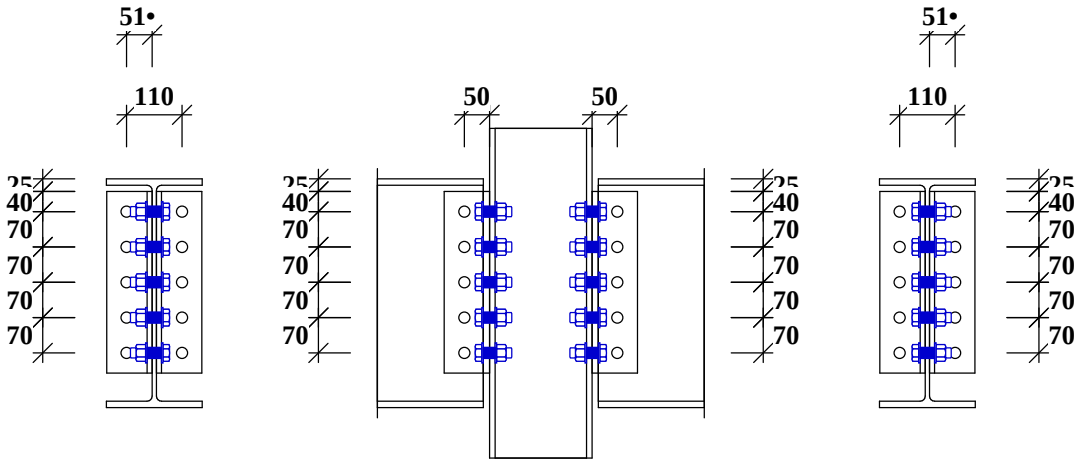

Beam 1: 457x191 UB 67 [S275]
2 No. 90 x 90 x 10 L x 360 mm (2x5 kg)
With 5 No. 22 mm holes in webs
and 5 No. 22 mm holes in toes
For 15 No. 20 mm Ø Grade 4.8 Bolts.

Column: 203x203 UC 46 [S 275]
Angle Cleats S 275

Beam 2: 457x191 UB 67 [S275]
2 No. 90 x 90 x 10 L x 360 mm (2x5 kg)
With 5 No. 22 mm holes in webs
and 5 No. 22 mm holes in toes
For 15 No. 20 mm Ø Grade 4.8 Bolts.

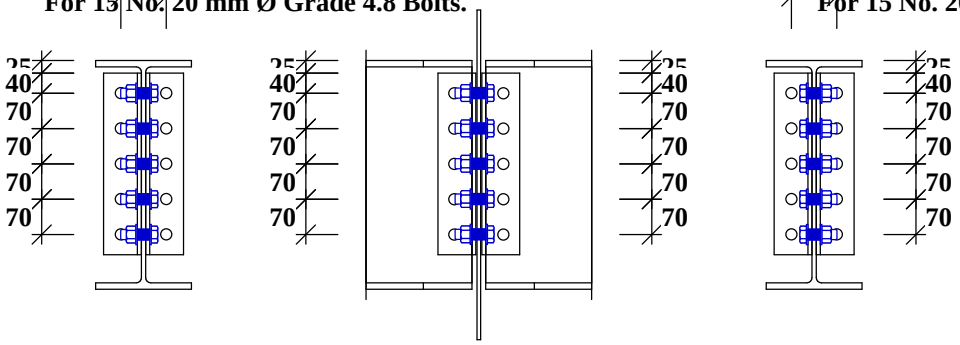

Beam 1: 457x191 UB 67 [S275]
2 No. 75 x 75 x 8 L x 360 mm (2x3 kg)
With 5 No. 22 mm holes in webs
and 5 No. 22 mm holes in toes
For 15 No. 20 mm Ø Grade 4.8 Bolts.
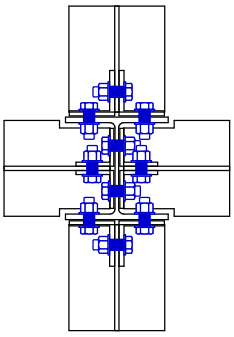
Beam 2: 457x191 UB 67 [S275]
2 No. 75 x 75 x 8 L x 360 mm (2x3 kg)
With 5 No. 22 mm holes in webs
and 5 No. 22 mm holes in toes
For 15 No. 20 mm Ø Grade 4.8 Bolts.